TREATISE

ON

VALVE-GEARS,

WITH SPECIAL CONSIDERATION

OF THE

LINK-MOTIONS OF LOCOMOTIVE ENGINES.

By Dr. GUSTAV ZEUNER,

PROFESSOR OF APPLIED MECHANICS AT THE CONFEDERATED POLYTECHNIKUM OF ZURICH.

Third Edition, Revised and Enlarged.

TRANSLATED FROM THE GERMAN, WITH THE SPECIAL PERMISSION OF THE AUTHOR,

By MORITZ MÜLLER.

LONDON:

E. & F. N. SPON, 48, CHARING CROSS.

1869.

Digitized by Google

THE NEW YORK
PUBLIC LIBRARY
912003
ASTOR, LENOX AND
TILDEN FOUNDATIONS
R 1919 L

LONDON: PRINTED BY W. CLOWES AND SONS, STAMFORD STREET AND CHARING CROSS.

Digitized by Google

TO

ROBERT SINCLAIR, Esq.,

MEMB. INST. CIV. ENG.,

LATE CHIEF ENGINEER OF THE GREAT EASTERN RAILWAY.

Dear Sir,

By your kind permission, I dedicate this Translation to you, not only on account of the numerous improvements which you have introduced in the construction of Locomotives, and of the high position held by you as a Railway Engineer, but also because it affords me an opportunity of acknowledging the many instances of kindness which I have experienced at your hands during my residence in this country.

I have the honour to be, dear Sir,

Your obedient servant,

Moritz Müller.

London, *December*, 1868.

Digitized by Google

Digitized by Google

TRANSLATOR'S PREFACE.

THE great circulation and the general acknowledgment which Professor Zeuner's Circle Diagram obtained in a few years amongst the German Engineers, and also the little knowledge of it which exists in England, have induced me, on the occasion of the publication of the Third Edition of Professor Zeuner's 'Treatise on Valve-Motions' to translate this edition into the English language. I now hand over to the public this Translation (which is as nearly as possible a literal one), and have only to add the desire, that the excellent work by Professor Zeuner may meet in England with the same success as it has in Germany, and that it may be as generally adopted.

MORITZ MÜLLER.

LONDON, *December*, 1868.

Digitized by Google

AUTHOR'S PREFACE TO THE THIRD GERMAN EDITION.

THE Third Edition of my 'Treatise on Valve-Motions,' which I hand over herewith to the public, may be called a repeatedly increased and improved one. Indeed, a comparison with the Second Edition shows that the additions and improvements belong almost exclusively to the *First* Part of the book, which explains the valve-motions with *one* valve. In the First Division of the First Part, *Simple Valve-motions with One Valve*, the law of the movement of the valve has been examined more radically, and also with consideration of the law of the variations of the velocities; the number of the examples has been increased, and the question as to what angle the centre line of the eccentric has to form with the centre line of the crank for given angles of advance in different arrangements of engines, has been more minutely examined, whilst I have finally explained, in a brief manner, for completeness, the older method of representing the distribution of the steam by means of valve-ellipses.

The division on "Link-Motions" has been enlarged by a new chapter, which describes the link motion by Pius Fink: of course this valve-motion is, considered in a theoretical manner, less perfect than the older reversing motions by Stephenson, Gooch, and Allan; but it distinguishes itself by great simplicity, and to this fact it is to be attributed that it has lately been applied very often to stationary engines. As Appendix there appears finally as new, the investigation of the counter-effect of the steam.

The *Second* Part, which explains the valve-motions with double valves, remains unaltered: there was much material for considerable

Digitized by Google

additions, but the size of the book would have surpassed the admissible limits if I had extended the investigations to all valve-motion known at the present time. I consider the double valve-motions, which I have explained in this treatise, and which also till now have been almost the only ones applied to locomotives, as those the thorough study of which furnishes the required information for examining, by means of the polar diagram, the mode of action of all other valve-motions not mentioned in this treatise.

Since the publication of my first articles in the 'Civilingenieur' (1856) on valve motions, in which I explained, for the first time, the use of my diagram, the graphical method of determining the distribution of the steam in valve-motions of all kinds as given by me has become generally known amongst the German engineers, and the diagram has perhaps always been applied to the designing and examining of link-motions with advantage; the method is less known in France and England, but as the present Third Edition of the book is simultaneously published in London as an English translation, I may, perhaps, express the hope that the procedure will also next find application and acknowledgment amongst the engineers of England.

I should almost think that a thorough instruction in the study of the action of valve-motions, such as I have tried to give in this book, would be to-day more welcome to the designer than formerly, as at present in the construction of steam-engines more and more care is applied to the execution of the different parts, and especially to the valve-gear. I consider, also, in this way to realize the perfection of our steam-engine by means of continued improvements in the constructive execution of the different parts, as theoretically the correct one, as I have already thoroughly demonstrated in my new theory of the steam-engine (Grundzüge der mechanischen Wärmetheorie, 2 Aufl. Leipzig, 1866.) The mode of action in our steam-engines differs but little from that which, according to the mechanical theory of heat, has to be considered theoretically as the most perfect one, and it is easy, as I have shown (in another place) to calculate the *insignificant* loss of effect which is produced by this difference. I expect, therefore improvements of the steam-engine abstractedly from the apparatus

Digitized by Google

for producing the steam, and the question, how far the application of superheated or mixed steam is advantageous; almost exclusively in the direction which practical men have so successfully chosen.

Of course, those who still believe *in the results of calculations based upon quite incorrect suppositions*, that our present steam-engines turn to account in the most favourable cases only from 5 to 7 per cent. of the power which the heat of the fuel contains, have to consider consequently the results of all improvements in the constructive execution of the different parts of the steam-engine proportionately as very insignificant, and they will therefore attach but little importance to a careful execution of the valve-gear, and to an exact study of its mode of action. Redtenbacher still expressed such an opinion in his last work (Der Maschinenbau, Mannheim, 1863, B. 2). But this excellent man himself would be to-day certainly of another opinion, and would agree to the facts to which the mechanical theory of heat has led in the examination of the action of the steam-engine.

GUSTAV ZEUNER.

ZURICH, *October*, 1868.

Digitized by Google

CONTENTS.

FIRST PART.

VALVE-GEARS WITH ONE SLIDE-VALVE.

FIRST DIVISION.

SIMPLE VALVE-GEAR WITH FIXED EXPANSION.

CHAPTER I.

	PAGE
Description of the simple Valve-Gear with Hollowed Slide-Valve	7
Theory of the Valve-Motion in the simple Slide-valve Gear	9
Practical Application of the Diagram	20
Solutions of a few Problems	28
Practical Notes on the designing of Valve-Gears	36

CHAPTER II.

On the "Missing Quantity" in the Formula of the simple Valve-Motion ..	41
Representation of the Distribution of the Steam by means of Valve-Ellipses ..	45
The Diagram by Reuleaux	48
The Diagram by Müller	51

SECOND DIVISION.

REVERSING MOTIONS WITH VARIABLE EXPANSION.

(Link-Motions.)

CHAPTER I.

Link-Motion by Stephenson.

Description of the Link-Motion	57
Theory of Stephenson's Link-Motion:—	
a. Determination of the Travel of the Slide-valve	59
b. On the Curve of Centres	65
c. On the Suspension of the Link	66
Practical Application of the Diagram	76
On the "Missing Quantity"	96

CHAPTER II.

Link-Motion by Gooch.

Description of the Valve-Motion	98
Theory of the Link-Motion by Gooch:—	
a. Determination of the Travel of the Valve	99
b. On the Curve of Centres	103
c. On the Suspension of the Link and of the Radius-rod	104
Practical Application of the Diagram	108

Digitized by Google

CHAPTER III.

Link-Motion by Allan.

PAGE

Description of the Link-Motion 113
Theory of Allan's Link-Motion :—
a. Determination of the Travel of the Valve 115
b. On the Curve of Centres 120
c. On the Suspension of the Link and of the Radius-Rod 120
Practical Application of the Diagram 122

CHAPTER IV.

Link-Motion by Heusinger von Waldegg.

Description of the Link-Motion 127
Theory of Heusinger von Waldegg's Link-Motion :—
a. Determination of the Travel of the Valve 129
b. On the Curve of Centres 132
Practical Application of the Diagram 133

CHAPTER V.

Link-Motion by Pius Fink.

Description of the Link-Motion 137
Theory of Fink's Link-Motion :—
a. Determination of the Travel of the Valve 138
b. On the Curve of Centres 143
c. On the Suspension of the Link and of the Radius-rod 144
Practical Application of the Diagram 148
APPENDIX TO FIRST PART.—On the Counter-effect of the Steam in Engines with Reversing-Gear 152

SECOND PART.

VALVE-MOTIONS WITH TWO VALVES.

CHAPTER I.

Valve-Motion by Gonzenbach.

Description of the Valve-Motion 163
Theory, and Application of the Diagram 164

CHAPTER II.

Valve-Motion by Meyer.

Description of the Valve-Motion 187
Theory and Application of the Diagram 190

CHAPTER III.

Valve-Motion by Polonceau.

Description of the Valve-Motion 209
Theory and Application of the Diagram 211

WORKS ON LINK-MOTIONS 220

Digitized by Google

TREATISE

ON THE

VALVE-GEARS.

INTRODUCTION.

THE valve motion of steam-engines has to perform the duty of admitting the steam directly from the boiler to the cylinder alternately before and behind the piston, and of releasing the used steam into the air in non-condensing engines, and into the condenser in engines with condensation.

The entrance and exhaustion of the steam takes place through the steam-ports, of which the one leads to the one and the other to the other end of the cylinder. Now, in the construction of the valve-gear, it is the problem to open the entrances of these ports alternately by the application of peculiar arrangements at one time to the steam-pipe, and at the other time to a port which communicates either with the open air or with the condenser. These arrangements, which act directly in the manner stated, form the so-called *inside gear*, and consist in slide-valves, valves, or cocks.

Those parts of the steam-engine, which transfer motion from the engine itself to the above-mentioned arrangements, are comprised under the name "*outside gear.*"

They are divided principally into those gears in which this motion.

Digitized by Google

is given by eccentric discs (eccentrics), and those obtaining their motion from oscillating levers.

The slide-valve gears are those which are most applied and most important, and as also they alone induce to theoretical studies of the distribution of steam effected through them, an investigation into the seldom-applied valve and cock-gears has been entirely omitted in the following treatise. The slide-valve consists generally of a hollowed plate, which moves backwards and forwards over the entrances of the steam-ports; or if the slide-valve acts as a so-called expansion slide-valve, it only consists of a single plate, which may or may not have slots or ports for the admission of steam.

Slide-valve gears are divided into two kinds:—

(1) Slide-valve gears with one slide-valve, and

(2) Slide-valve gears with two slide-valves.

The slide-valve gears are always constructed in such manner as to admit the steam into the cylinder, not during the whole stroke of the piston, but only during a greater or smaller part of it; after the cutting off, the steam acts by its extension, or as it is called, by expansion. Now this earlier or later cut-off, or the greater or less expansion may be effected very well, as will be shown further on, by one single slide-valve; but there are certain limits for the expansion thus effected, and it very often happens, that the distribution of steam effected by one slide-valve when cutting off very early proves to be disadvantageous. Slide-valve gears with two slide-valves are applied in such cases; besides the *distribution valve*, a second one is used, which is called the *expansion valve*, and which has only to regulate the admission and cutting off of the steam.

The motion of the slide-valve is produced, with very few exceptions, by means of eccentrics. For motions with one slide-valve there are employed *one* or *two* eccentrics; one eccentric is applied if

Digitized by Google

the rotary motion of the engine takes place always in the same direction, while generally two eccentrics are applied if the motion of the engine has to be sometimes reversed. Motions of the latter kind, which are to be found with locomotive, marine, and winding engines, will be called in future "reversing motions."

The motions with two slide-valves have generally two or three eccentrics; in the first case, the one eccentric moves the one, and the other eccentric the other slide-valve; this arrangement is most applied to stationary engines, which run always in the same direction. In the case of a reversing motion with two slide-valves, either three or two eccentrics are applied. If there are three eccentrics, the one governs the motion of the expansion valve, and the two others the motion of the distribution valve; but in this case also two eccentrics only are very often applied.

The number of the eccentrics, however, cannot at all be taken as a starting point for the classification of the different systems of motions; should it appear desirable to classify the two sorts of motion—the motion with one valve and that with two valves—into subdivisions, the manner in which the expansion is governed would be the only base to start from, and both kinds of motion may then be divided as follows:—

(*a*) Motions with fixed or unvariable expansion.

(*b*) Motions with variable expansion.

In motions of the first kind the cutting off of the steam by the slide-valve takes place always at the same point of the stroke of the piston, while in the case of motions with variable expansion the cut-off may be effected at any point of the stroke. The latter motions may again be distinguished according to whether an alteration of the expansion requires the stopping of the engine, or whether the alteration can be effected whilst the engine is running. But in the

Digitized by Google

following pages no notice will be taken of the above-given classification, for a general view of the demonstration cannot be attained by it; and all motions examined in the following pages, with the exception of the motion with one valve and a fixed eccentric first considered, are those which allow a variable expansion, and in which the alteration of the expansion may be effected during the running of the engine.

Digitized by Google

FIRST PART.

VALVE GEARS WITH ONE SLIDE-VALVE.

Digitized by Google

Digitized by Google

FIRST DIVISION.

SIMPLE VALVE-GEAR WITH FIXED EXPANSION.

CHAPTER I.

Description of the Simple Valve-gear with Hollowed Slide-valve.

THE gear represented in Fig. 1, Plate I., is a slide-valve gear, which is applied most to stationary steam-engines. The engine runs always in the same direction, and the degree of expansion is a fixed one, the cutting-off of the steam taking place always at the same point of the stroke of the piston.

The slide-valve S moves backwards and forwards over the openings o_1, o_0, o in the face of the steam cylinder. The two ports o and o_1 lead to the ends of the cylinder, while the third port o_0 leads to the open air or into the condenser. When the slide-valve is in the position shown in Fig. I., the steam passes from the steam-chest K through the port o_1 into the cylinder, and the piston B as well as the crank R are therefore moved in the direction marked by the arrows. At the same time the steam, which is behind the piston, passes through the port o and the inner hollow of the slide-valve into the exhaust-port o_0, and therefore into the open air or into the condenser. To drive the piston back by the steam, after it has reached the end of its stroke, it is only necessary to move the slide-valve S so far towards the left that the part o is uncovered; o will then be the port for the admission, and o_1 the port for the exhaustion of the steam.

A correct movement of the slide-valve is obtained in practice by employing *eccentric discs* or *eccentrics*. The eccentric is a disc D, Fig. 1, Plate I., which is keyed to the crank-axle, but whose centre does not coincide with the centre of the axle. The distance between the centre of the eccentric and the centre of the axle is called the *eccentricity*. The eccentric is keyed to the axle in such a manner, that a line connecting these two centres forms a certain angle with the

Digitized by Google

position of the crank. The size of this angle, as well as the amount of the eccentricity, exercise an important influence on the manner in which the distribution of steam is effected.

The eccentric is surrounded by a strap, which is fixed to the one end of the eccentric rod F; the other end of this rod is connected either directly with the valve-spindle or acts upon the one end of a lever, the other end of which is connected to the valve-spindle. It will be understood, without further explanation, that on a revolution of the axle, and therefore also of the eccentric, taking place, a movement of the slide-valve will be effected exactly in the same manner, as if the movement originated from a crank fastened upon the axle and of which the arm was equal to the amount of the eccentricity of the eccentric.

The movement of the slide-valve, as produced by the eccentric, takes place, therefore, according to a certain law, in consequence of which the position of the slide-valve is at any moment in a fixed relation to the corresponding positions which the crank and the piston occupy at the same moment. Besides the amount of the eccentricity of the eccentric, and its position relatively to the crank, the dimensions of the slide-valve itself exercise a great influence upon the manner in which the distribution of the steam is effected.

Fig. 1.

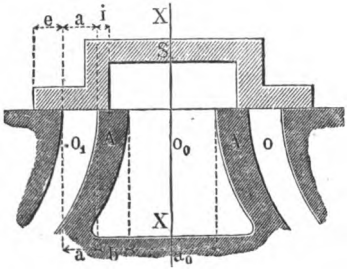

Fig. 1 represents a slide-valve, or as it is sometimes called in consequence of its shape, a *D slide-valve* (Muschelschieber), or *hollowed slide-valve*, and that part of the cylinder which contains the mouths of the three steam-ports. The two admission-ports o and o_1 are separated from the exhaust-port o_0 by the fixed bars or bridges A A, and the slide-valve S is shown exactly at its central position. It will be seen that the face of the slide-valve not only completely shuts the two steam-ports, but that it extends at each end for a certain amount beyond the openings. This amount e is called *outside lap*, or *outside cover*, or more frequently simply *lap*. On the other hand, the face extends also partly over

Digitized by Google

the bridges A for a distance i; this amount is called *inside lap*, or *inside cover*. The amount of the outside and inside lap and their relations to the width of the ports o and o_1 are of great importance in the theory of the slide-valve motion; for it depends upon the right proportions of these parts, to what extent the steam may act by expansion, *i. e.* at what point in the stroke of the piston the admission of the steam into the cylinder may be cut off. The following is a complete explanation of all these proportions.

In representing in Fig. 1, Plate I., a steam-engine with the slide-valve gear, we have chosen an arrangement according to which the piston and valve rod are situated in the same vertical plan, and in which the directions of motion are inclined towards each other. Whether now the arrangement in other engines be different, whether perhaps the valve-rod and piston-rod move in the same direction and are situated in different planes, whether between the valve-rods and eccentric rods there is inserted a rocking-lever, it is at first unimportant to consider, and we shall conduct our observations in such a manner that the results will be correct for all the above-mentioned different arrangements, whilst further on we shall speak about the influence of such varieties of construction.

Theory of the Valve-Motion in the simple Slide-valve Gear.

In Fig. 2, O is the centre of the axle upon which the eccentric is fastened · $O D = O D_0 = r$ is the eccentricity; $D B_1 = l$ is the length of

Fig. 2.

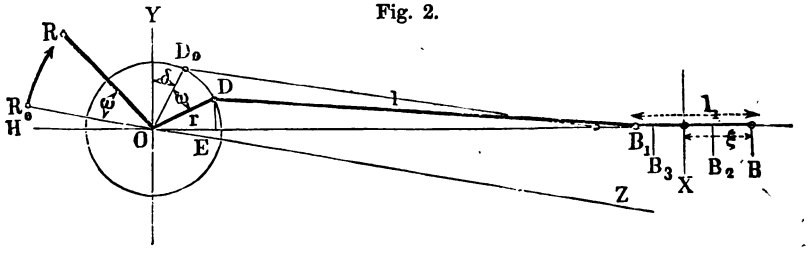

the eccentric rod; $B B_1 = l_1$ is the length of the valve spindle; the point B may be also exactly in the centre line X X (Fig. 1) of the slide-

Digitized by Google

valve. While now O B represents the direction of the valve face, *i. e.* of the even plane, upon which the slide-valve moves backwards and forwards, O Z gives the direction of the centre line of the steam-cylinder. If therefore the crank stands in the direction of O Z produced, *i. e.* if it occupies the position O R_0, it is passing then through one of its dead points, and the piston is at the beginning of its stroke.

At this moment the radius $O D_0 = r$ of the eccentricity forms with the vertical line O Y the angle δ; this angle is called the *angle of advance*, or simply *angular advance*. We therefore always give the name *angular advance* to that angle, *which the line of eccentricity forms with a perpendicular to the direction of the valve face, when the crank passes through one of its dead points.* If we suppose now that the axle is turned through the angle ω, centre lines of the crank and eccentric will also have moved through the angle, the latter will be shifted from the position $O D_0$ into that marked O D, and the slide-valve will be also moved for a certain distance. If the centre line of the slide-valve has after this movement arrived at B, the distance O B is to be first calculated, and to do this, we drop from D the perpendicular D E upon O B, and get:

$$O B = O E + E B_1 + B_1 B = O E + \sqrt{\overline{D B_1}^2 - \overline{D E}^2} + B B_1$$

$$O B = r \sin(\omega + \delta) + \sqrt{l^2 - r^2 \cos^2(\omega + \delta)} + l_1,$$

or approximately (because l is always very large in proportion to r, and we may therefore neglect in the evolution of the expression under the root all factors which have l^2 as a denominator):

$$O B = r \sin(\omega + \delta) + l_1 + l - \frac{r^2 \cos^2(\omega + \delta)}{2 l}.$$

But by the nature of the arrangement, the centre B of the slide-valve must move symmetrically backwards and forwards on either side of a fixed point in such a manner, that the centre of the slide-valve, at the times of the crank passing the points ω and $180 - \omega$, is at equal distances, but on opposite sides of the point X. Many designers adjust the slide-valve by bringing the crank alternately on its dead points, therefore taking $\omega = 0$ and $\omega = 180°$, and then marking

Digitized by Google

the two corresponding positions B_1 and B_2 of the centre of the slide-valve and fixing the centre X of the distance $B_1 B_2$; this centre X is the central point of the stroke of the valve, and must fall exactly in the middle of the exhaust port. This method of proceeding is, as we shall show presently, also theoretically the most correct one, and we shall apply it, in order to calculate the position of X, or the distance O X. If in the last formula for obtaining O B, we for once make $\omega = 0$, we get:

$$O B_2 = r \sin \delta + l_1 + l - \frac{r^2 \cos^2 \delta}{2 l},$$

Whilst if we make $\omega = 180^0$, we get:

$$O B_1 = -r \sin \delta + l_1 + l - \frac{r^2 \cos^2 \delta}{2 l}.$$

The mean of these two values gives the distance of the centre of motion X from the centre of the axle

$$O X = l + l_1 - \frac{r^2 \cos^2 \delta}{2 l}. \qquad (1)$$

But the whole object of an investigation of the motion of the slide-valve is to enable us to fix the distance of the slide-valve centre B from the centre of motion X, corresponding to any angular movement ω of the axle, or as we may say, to fix the movement of the valve for any angle ω through which the axle is turned.

According to Fig. 2, the movement of the valve is $B X = O B - O X$; calling this ξ and using for O B and O X the above given values, we get, after a few reductions:

$$(I^a) \qquad \xi = r \sin (\omega + \delta) + \frac{r^2}{2 l} [\cos^2 \delta - \cos^2 (\omega + \delta)].$$

A transformation of the quantities between the brackets gives:

$$\xi = r \sin (\omega + \delta) + \frac{r^2}{2 l} \sin (2 \delta + \omega) \sin \omega,$$

or also by dissolving of the first factor:

$$(I^b) \qquad \xi = r \sin \delta \cos \omega + r \cos \delta \sin \omega + \frac{r^2}{2 l} \sin (2 \delta + \omega) \sin \omega.$$

If we make:

$$r \sin \delta = A \qquad (2)$$
$$r \cos \delta = B, \qquad (3)$$

Digitized by Google

A and B being constant quantities for any particular slide-valve gear; and

$$\frac{r^2}{2l} \sin \frac{1}{2} l - x \sin x = F,$$

then we get:

$$(2) \qquad \xi = A \cos x - B \sin x - F.$$

The last quantity F is always very small, because l is always very large in proportion to r; we will call this quantity, which may be neglected in almost all cases, the "*missing quantity*," and we will devote to it a special consideration in another chapter. Neglecting this quantity, the formula becomes:

$$(I) \qquad \xi = r \sin l \cos x - r \cos l \sin x.$$

Now we may state here, that it is a peculiarity of all slide-valve motions, the simple motion as well as the link motion, that the formula for the travel of the valve ξ measured either to the right or to the left of the centre of the movement can be always reduced to the general shape of $\xi = A \cos \omega \pm B \sin \omega + F$, in which A and B represent values, which depend upon several dimensions of the gear, but are independent of the angle ω, through which the axle is turned, and which are therefore constant quantities, which may be calculated easily for the simple valve motion, according to equation (2) and (3). The missing quantity F depends upon the amount of angular movement; but the numerical value of it is, in correct and well-constructed valve-gears, so very small, that it may be almost always neglected. The movement of the valve is then in general:

$$(I^d) \qquad \xi = A \cos x \pm B \sin x.$$

In investigating the formula (I^d) more minutely, we shall at first take no notice of the special values of A and B, and only use farther on the values $A = r \sin \delta$; $B = r \cos \delta$, which we have already found for the simple valve-gear. As we shall at a future time meet with valve motions, in which B is negative, we shall examine—as already indicated by the manner of writing equation (I^d)—in the following observations the meaning of both the signs at the same time.

The equation (I^d) above given is *the polar equation of two circles of*

Digitized by Google

equal diameter which touch each other, it being supposed that the pole lies at the point of contact.

In order to prove this, let O be the touching point of two circles (Fig. 3), both described with the radius O C = ρ, and let O X be any straight line passing through the point of contact O; further let O B = a and C B = b be the co-ordinates from the centre of one circle; then, if we express the radius vector O P of any point P of the circle by ξ, and the angle, formed by this line O P with the original position O X by ω, we have:

Fig. 3.

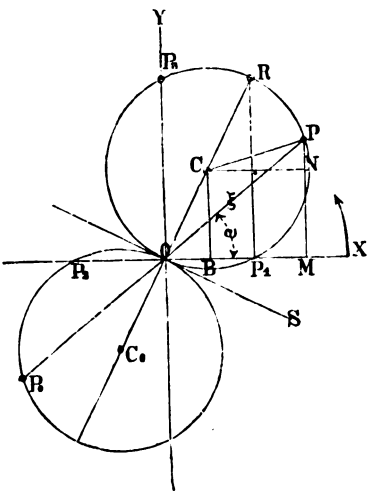

$$O\,M = \xi \cos \omega \text{ and } M\,P = \xi \sin \omega.$$

If we draw also the line C N parallel to O X, we get next:

$$\overline{C\,N}^2 + \overline{N\,P}^2 = \overline{C\,P}^2 \text{ or}$$
$$(O\,M - O\,B)^2 + (M\,P - M\,N)^2 = \overline{C\,P}^2,$$

which gives:

$$(\xi \cos \omega - a)^2 + (\xi \sin \omega - b)^2 = \rho^2,$$

whence it follows that as $a^2 + b^2 = \rho^2$:

$$\xi = 2\,a \cos \omega + 2\,b \sin \omega.$$

If the ordinate B C = b of the centre of the circle extends from B downwards, then, the centre C being below O X (Fig. 4), b becomes negative, and

Fig. 4.

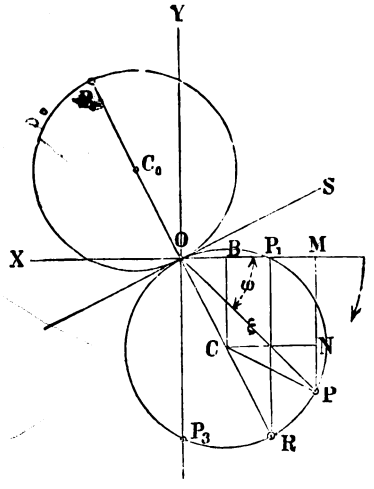

$$\xi = 2\,a \cos \omega - 2\,b \sin \omega.$$

Both equations are identical with equation (I^d), if

$$2\,a = A \text{ and } 2\,b = B;$$

Digitized by Google

whence follows:

$$a = \frac{A}{2} \text{ and } b = \frac{B}{2}.^*$$

If, therefore, the values of A and B are known for a certain case, the centre C of the circle may be at once determined, and this serves to decide the travel of the valve, if the distance O B upon O X measured from O is made $= a = \frac{A}{2}$ and the perpendicular at B, or B C $= b = \frac{B}{2}$. The radius of the circle is found without any further difficulty.

$$\rho = \sqrt{a^2 + b^2} = \frac{1}{2}\sqrt{A^2 + B^2}. \qquad (5)$$

It will be seen from the above, with what facility the movement of the valve ξ may be obtained for any angular movement X O P $= \omega$ of the crank; this movement being simply the radius vector O P corresponding to that angle. If, therefore, the centre of the corresponding circle passing through O can be fixed, which is always very easy, as will be seen from the following, the movement of the valve, or the distance between the valve centre and the centre of movement for each position of the crank can be measured directly from the Figure.

After the above statement, we may examine immediately a few general relations between the movement of the valve ξ and the angular movement ω, considering that the values of A and B are still certain constant ones, which depend upon the kind of valve-gear.

* The equation (I^d) is, mathematically, the polar equation of *a single* circle, described in Figs. 3 and 4 from C. This will be easy to prove, if the equation of the curve for rectangular co-ordinates is taken instead of the polar equation. If we put, in Fig. 3, O M $= x = \xi \cos \omega$ and M P $= y = \xi \sin \omega$, it follows from equation (I^d):

$$x^2 + y^2 = Ax + By,$$

and this equation gives for each value of x only two values of y. This also confirms the polar equation (I^d) itself; for by substituting in the equation

$$\xi = A \cos \omega + B \sin \omega$$

$\omega + 180$ for ω, it follows:

$$\xi = -(A \cos \omega + B \sin \omega);$$

the radius vector O P_0, in Fig. 3, must therefore not be drawn from O in the direction O P_0, but in the negative direction, *i.e.* again towards P, and therefore leading again to the circle described from the point C. The admission, however, that we have to deal with two circles touching each other, facilitates greatly the study of the laws according to which the movement of the slide-valve takes place in the different valve-gears.

Digitized by Google

If the crank is at the dead point, $\omega = 0$, and it follows from the equation

$$\xi = A \cos \omega + B \sin \omega$$
$$\xi = A;$$

Or as, according to the above, $O B = a = \frac{A}{2}$ (Fig. 3).

$$\xi = O P_1.$$

The line O P therefore gives at once the movement of the valve at the beginning of the stroke of the piston. If $\omega = 180°$, *i. e.* if the crank is at the other dead point, then:

$$\xi = -A,$$

or, according to the Figure $\xi = O P_2$, where P_2 signifies the point at which the second circle cuts the line O X. The movement of the valve is = *nil*, or the valve is in its central position, if

$$0 = A \cos \omega \pm B \sin \omega, \text{ or if}$$
$$tang. \omega = \mp \frac{A}{B} = \mp \frac{a}{b}.$$

The upper sign is taken, if the centre of the circle lies above O X (Fig. 3).

But by the condition

$$tang. \omega = \frac{a}{b}$$

it appears that the corresponding angle may be very easily found, if a line O S is drawn through O and at right angles to O C; the angle S O X shows therefore the angle at which the crank stands *before* the dead point, if the slide-valve is in the central position. If the centre C lies below O X, as really happens in some valve-motions, which will be examined later, it is

$$tang. \omega = + \frac{a}{b};$$

in this case also the required angle S O X is found by dropping the perpendicular O S from O upon O C (Fig. 4). The maximum movement of the valve ξ is found from the equation:

$$\xi = A \cos \omega \pm B \sin \omega \text{ by differentiation}$$
$$\frac{d \xi}{d \omega} = -A \sin \omega \pm B \cos \omega = 0, \text{ or}$$
$$tang. \omega = \pm \frac{B}{A} = \pm \frac{b}{a},$$

Digitized by Google

i. e. the corresponding angle ω is that which the line O C (Figs. 3 and 4) forms with O X, or C O X; the length of the travel of the valve itself is in this case

$$O R = 2\rho = \sqrt{A^2 + B^2}.$$

If finally the crank is at right angles to the line of motion of the piston, *i. e.* if it has moved 90 from the dead point, then:

$$\xi = A \cos 90 \pm B \sin 90 = \pm B.$$

If therefore in Fig. 3 or 4, O P_s is perpendicular to O X, O P_s = B indicates the position of the valve, if the crank is at right angles to the direction of the motion of the piston. By all this it appears that it is only necessary, in order to ascertain the distance of the valve from the centre of its stroke for different positions of the crank, to describe *one* circle from the point C; if O P is produced above O as far as P_e, then O P_e = O P; as now O P_e expresses the distance of the valve from the centre of its stroke for (180 + ω), it is only necessary on account of the equality of O P and O P_e to fix O P, or to describe one circle. In the same manner the case represented in Fig. 4, which occurs under the supposition that the second quantity in the equation

$$\xi = A \cos \omega \pm B \sin \omega$$

is taken as negative, may be easily referred to the case shown in Fig. 3, the two cases being distinguished only so far as that the angular movement of the crank takes place in opposite directions. The angles ω are in Fig. 3 to be laid off from O X upwards, and in Fig. 4 from O X downwards. If A and B are in both instances equal, the same will be the case with O P for equal angles ω. It is therefore not necessary for us to take any further notice of the sign of the second quantity of the above equation in the following general investigation.

We shall now apply the results above obtained to the simple valve-motion, in which according to equation (2) and (3):

$$A = r \sin \delta$$
$$B = r \cos \delta.$$

The co-ordinates of the centre of that circle whose chords give directly

Digitized by Google

the movement of the valve (Fig. 3, page 13) are according to equation (4):

$$O B = a = \frac{A}{2} = \frac{1}{2} r \sin \delta \text{ and}$$

$$B C = b = \frac{B}{2} = \frac{1}{2} r \cos \delta,$$

therefore the radius of this circle, which we will now call the "*valve-circle:*"

$$C O = \varrho = \frac{1}{2} \sqrt{A^2 + B^2} = \frac{1}{2} r,$$

and its diameter

$$O R = 2 \varrho = r,$$

i. e. in the simple valve-motion *the diameter of the valve-circle is equal to the eccentricity r.*

The angle C O Y, formed by the diameter of the valve-circle with the vertical O Y, is next found (Fig. 3):

$$\text{tang. } C O Y = \frac{O B}{B C} = \frac{a}{b} = \frac{A}{B} = \text{tang. } \delta,$$

$$\text{whence } \angle C O Y = \delta,$$

or in words: *the required angle is equal to the angle of advance.*

By that which has been already stated, it will be seen with what facility the law of the slide-valve motion, if the valve is driven by an eccentric, may be laid down graphically. Had the problem only been to find the law of the movements of the simple slide-valve gear with one eccentric, the results of the calculation last given might have been obtained in a much shorter way, as follows:—

Let O Y in Fig. 5 be a perpendicular let fall from the point O upon O X, the direction of the valve-face; then draw from O a line O D = r = the eccentricity, this forming with the perpendicular O Y the angle Y O D = δ the angle of advance; and next describe, with O D = r as diameter, a circle, which will be the valve-circle. Let the crank be in the position O X, or on its dead point, and from there let it be turned through the angle X O R = ω, then the length O P gives at once the distance of the valve from its central position when the crank-angle = ω.

Fig. 5.

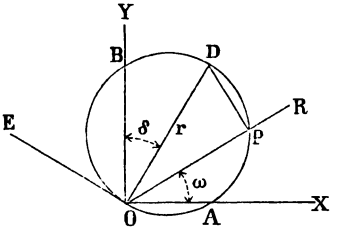

Digitized by Google

Neglecting the "missing quantity," equation (I^a) gives also the travel of the valve ξ:

$$\xi = r \sin (\omega + \delta).$$

Drawing in Fig. 5 the line D P, the angle D P O is a right angle, while the angle D O P in triangle D O P is found to be $90 - (\omega + \delta)$, whence it follows that O D $= r$, and without anything further it will be seen that

$$O P = r \cos [90 - (\omega + \delta)]$$

or

$$O P = r \sin (\omega + \delta) = \xi$$

which had to be proved.

If the equation for the travel of the valve is given in the shape

$$\xi = A \cos \omega + B \sin \omega$$

as we above supposed, and as is the case in a number of valve motions which we shall examine later on, and in which the constant values of A and B are still more dependent upon the dimensions of other parts of the valve-gear, then make in Fig. 5 O A = A and O B = B and draw a circle through the points O, A, and B; such a valve-motion works then exactly like a simple motion, in which the eccentricity of the eccentric O D $= r$ and the angle of advance Y O D $= \delta$, whatever may be the nature of the mechanism of the valve-motion. If the movement of the valve is represented by the last-given equation, then the valve-motion may always be reduced in the manner indicated to a simple valve-motion; a fact of which we shall make use hereafter.

Besides this, the simple diagram also gives the means of proving the proportionate velocity of the movement of the slide-valve. The velocity of the slide-valve varies, and the manner in which this variation takes place will have been already seen from diagram Fig. 5, and it is only necessary to ascertain how the radius vector O P alters with the angle X O R $= \omega$. It is evident that the valve moves very slowly, in fact almost stands still, when it is near the end of its stroke, *i. e.* if the crank stands near the direction O D; but on the other hand, when the crank is in the position O E (perpendicular to O D), the valve has its greatest velocity, and this occurs when it is near the middle of its travel or stroke.

The law which governs the alterations in the velocity, is also very easily demonstrated in a graphical and analytical manner. Let the crank turn with the constant velocity ϵ; then if at the moment in

Digitized by Google

which the crank passes through the dead point, we begin to count the time t:

$$\omega = \varepsilon t$$

whence follows by substitution in the general formula for the travel of the valve:

$$\xi = A \cos \varepsilon t + B \sin \varepsilon t$$

and thence the velocity v of the valve at the time t:

$$v = \frac{d\xi}{dt} = -A \varepsilon \sin \varepsilon t + B \varepsilon \cos \varepsilon t$$

or

$$v = -A \varepsilon \sin \omega + B \varepsilon \cos \omega,$$

from which the velocity of the valve may be calculated for any angular position of the crank. If the valve-motion is considered to be reduced to a simple one, then put $A = r \sin \delta$ and $B = r \cos \delta$, and the velocity of the valve becomes:

$$v = -r \varepsilon \sin \delta \sin \omega + r \varepsilon \cos \delta \cos \omega$$

and this is the polar equation of two circles O E and O E_1 (Fig. 6), of which the diameter $r\epsilon$ is perpendicular to the centre line of the eccentric O D $= r$. At the position O R of the crank, *i. e.* when the angular motion $= \omega$, the movement of the valve from its central position is, according to the above O P, while the radius vector O Q represents the *velocity* v of the valve at that moment. The law for the alterations of the velocities will now be seen clearly; at the positions of the crank O D and O D_1 the velocity is nil, *i. e.* the valve stands still momentarily (at the greatest distance from its central position), and at the positions O E and O E_1 of the crank (at half-stroke) it has the greatest velocity of the value $r\epsilon$.

Fig. 6.

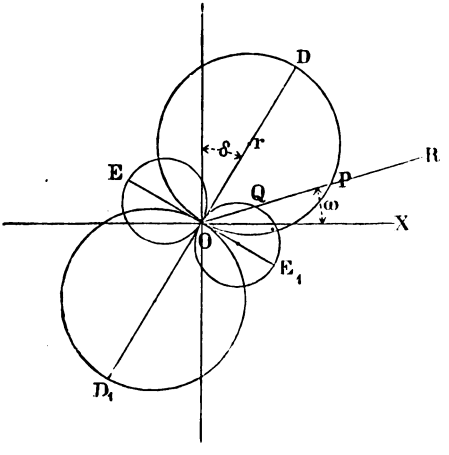

Digitized by Google

Practical Application of the Diagram.

We shall at first take an existing simple valve-motion, and show the manner in which the distribution of steam is to be ascertained from the dimensions of the parts of the valve-gear.

The amount of eccentricity O D (Fig. 2, page 9)$= r$, as well as the angle D O Y$=\delta$ may be taken as given. With these values as a base, we have at first to fix the movement of the valve, and to show what the extent of the movement of the valve from its central position will be, corresponding to any given angular movement ω of the crank from its dead point. This distance or movement of the valve is called ξ.

Draw the system of axes O X and O Y (Fig 2, Pl. I.); O X being supposed to coincide with the direction of the valve spindle or of the valve face. Draw from O a line O Z, so that Y O Z $= \delta =$ angle of advance, and make part O P_0 of O Z, as well as part O Q_0 of the production of O Z equal to the given eccentricity r; on these parts as *diameters* describe circles, which are the so-called *valve-circles*, explaining the movement of the valve in the following manner:

If we suppose a crank to occupy the position O X or O R, when the actual crank just passes through the first of its dead points, then if both cranks are turned through the angle ω, so that the imaginary crank comes into the position O R_1 that part O P of the line O R_1 which lies inside the valve-circle, represents at once the movement of the valve $= \xi$; *i.e.* the distance through which the valve has moved from its central position, while the actual crank has travelled through the angle ω from its dead point. The Figure gives for the angular movement X O Q $= 180 + \omega$ the same value for ξ, but the value is in this case negative; for the centre line of the crank here cuts the second circle described from C in such a manner, that O Q $=$ O P. The *upper* circle represents therefore the movement of the valve from its central position towards the *right*, the lower circle that towards the *left*. The results for both directions are the same, and we have therefore only to examine the upper circle. Before proceeding any further with our investigations, we may state that the Figure shows everything full size, and that the eccentricity is supposed to be taken as

Digitized by Google

$O P_0 = r = 0{\cdot}060^m$ (almost exactly $2\frac{11}{32}''$), and the angle of advance $Y O P = \delta = 33^0$. In order to ascertain therefore how far the valve has moved from its central position towards the right at the corresponding position of the crank, it is only necessary to measure with the rule the distance O P. If the crank stands at the dead point, it occupies the position O R, and then the distance of the valve from the centre of its travel is equal to $O P_1$; in the present case this distance $O P_1 = 0{\cdot}030^m$ (almost $1\frac{3}{16}''$). If the crank has turned so far that the chord O P becomes equal to the diameter, then the valve is farthest from the centre of its stroke; it will be seen from the Figure that such is the case, when the crank is in the position $O P_0$, or has moved from the dead point through the angle $P_0 O X = 90 - \delta$. A perpendicular $O R_0$ dropped upon the line $P_0 Q_0$ at the point O does not cut the circle, and the part O P becomes therefore = *nil*, the valve being just in the centre of its stroke, when the crank occupies the position $O R_0$, *i. e.* when it stands as much as the angle $R O R_0 = \delta$ before the dead point. Suppose the crank is turned from O R in the direction of the arrow, it will easily be seen by the figure that the chords, which represent the movements of the valve, increase quickly from O, while they only vary little whilst the crank moves near the centre of $O P_0$. The slide-valve travels therefore very quickly towards the middle of its stroke; but its movement takes place only very slowly near the ends of the latter. This fact, known long ago, is of great importance, and it exercises great influence on the whole distribution of the steam. The Figure plainly shows also the influence of the angle of advance, and of the amount of the eccentricity upon the movements of the valve corresponding to certain positions of the crank. If, for example, the eccentric were fixed without any angular advance, δ would = 0, and the diameter $O P_0$ would fall upon the vertical line O Y. If therefore the crank were on its dead points, the slide-valve would be just in its central position, and it would be most remote from the latter when the crank had turned through the angle 90° and 270°. The following will show the distribution of steam thus effected would be unsuitable, and such a case occurs therefore but seldom.

If we take $\delta = 90^0$, $O P_0$ would fall on the line O X; *i. e.* the

Digitized by Google

valve would be most distant from its central position when the crank stood at its dead points: and the valve would occupy its central position when the crank had moved through angles of 90° and 270°. Observations respecting the alterations in the movement of the valve may be made with equal facility, if the eccentricity r alone, or r and δ be altered simultaneously. It is of minor importance for practical investigations to fix the extent of the movement of the valve for different angular movements of the crank, but it is necessary to do this, to ascertain the influence of the angle of advance, as well as of the inside and outside lap, upon the manner in which the steam is admitted: or, on the contrary, to determine from the latter what dimensions ought to be adopted.

In Fig. 1, page 8, the valve is shown in its central position, the outside lap being e, the inside lap $= i$, and o, o_1 being the two ports for the admission of the steam.

If the valve has moved as much as ξ, Fig. 7, and if we have thereby obtained the opening of the port for the admission $= a_1$, we get, as will be seen from the Figure, without anything further, the equation

Fig. 7.

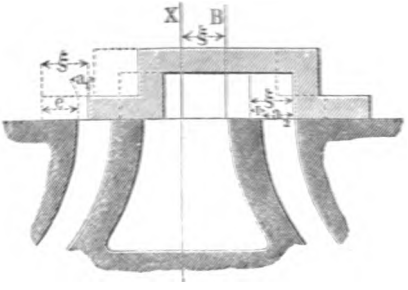

$$e + a_1 = \xi$$

or the opening of the port is

$$a_1 = \xi - e,$$

if the outside lap e is known. But the valve has at the same time opened the other port as much as a_2 for the exhaustion of the steam, and we get in this case, as also shown by the figure, the relation

$$i + a_2 = \xi \text{ or}$$
$$a_2 = \xi - i.$$

These two equations for a_1 and a_2 at once give also the size of the openings for the admission and for the release, as soon as there is fixed, according to the method above explained, the movement of the valve for any angular movement ω of the crank. It is only necessary to subtract in the one case the outside-lap e, and in the other case

Digitized by Google

the inside-lap i, from the movement of the valve to get the required opening. If it is desired to find these openings by the construction, then they may be obtained in a simple manner, as follows:—

We have found that for any angular movement $X O P = \omega$, Fig. 2, Plate I., the movement of the valve is equal to the radius-vector O P. Now the size of the opening for the admission of the steam for this position is obtained, if the outside-lap e is subtracted from ξ; and by describing therefore from the point O a circle $V_1 V V_2$ with the radius $O V = e$, the distance P V gives *at once the opening of the steam-port* corresponding to the angular movement $P O X = \omega$.

Describing in the same manner from O with the radius $O W = i$ the circle $W_1 W W_2$, it follows that the part P W of the radius-vector $O P - O W = \xi - i$, or in other words, it is equal to the width of the opening of the other port for the exhaustion of the steam.

As the Figure is drawn full size, and as the eccentricity r is supposed to be $= 0{\cdot}06^m$ ($O P_0$), (almost $2\frac{1}{3}\frac{1}{2}''$), the outside-lap $O V = e = 0{\cdot}024^m$ (·94 in.), the inside-lap $O W = i = 0{\cdot}007^m$ (·27 in.), and the angle of advance $Y O P_0 = \delta = 30°$, the dimensions O P, P V, P W, may be taken directly from the figure by the rule.

If the crank stands on a dead point, for instance, at O R, so that the piston is at the *beginning of its stroke*, the travel of the valve $= O P_1$, the opening for the exhaustion of the steam $= P_1 W_1$, and the opening for the admission of the steam $= P_1 V_1$. As is known, the opening of the port for the admission of the steam at the beginning of the stroke of the piston, or $V_1 P_1$, is called *the outside lead*, or the lead on the steam-side; but the opening of the other port for the exhaustion of the steam at the beginning of the stroke of the piston, or $W_1 P_1$, is called *the inside lead*, or the lead on the exhaust side.

For our special case, as may be immediately ascertained by measurement, the *outside* lead $V_1 P_1 = 0{\cdot}006^m$ (·236 in.), the *inside* lead $W_1 P_1 = 0{\cdot}023^m$ (·905 in.). The largest opening of the steam-ports occurs, when the valve has travelled the greatest distance from its central position, *i. e.* when the crank stands in the position $O P_0$; therefore the *largest* opening of the port for the admission of the steam is $P_0 V_5$ ($0{\cdot}036^m = 1{\cdot}417$ in.), and the largest opening for the exhaustion of the steam $= P_0 W_5$ ($0{\cdot}053^m = 2{\cdot}08$ in.), it being supposed that the ports are so wide altogether.

Digitized by Google

But Fig. 2, Plate I., also gives answers to all other questions. The question as to the positions of the crank, when the admission of the steam begins and ends can be answered in the following manner:— At these moments the valve occupies the position shown in Fig. 8,

Fig. 8.

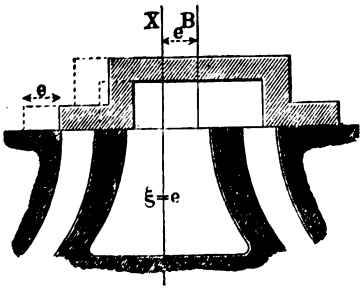

where the valve has moved from its central position for a distance just equal to the outside-lap e, *i. e.* ξ is equal to e. If we now return again to Fig. 2, Plate I., we find that the principal circle around C cuts the circle described with the outside-lap as a radius, in V_3 and V_4; and connecting both points with O and producing the connecting-lines backwards to the circle which is described by the crank-pin, these lines will give the position of the crank at the two moments at which the one outer edge of the valve is just level with the outside of the port, or, in other words, at which the admission commences and terminates.

Thus O R_3 is the position of the crank at the beginning of the admission of the steam; and it has thus to pass through the angle R_3 O R *before* reaching the dead point.

O R_4 is, moreover, the position of the crank at the end of the admission of the steam, and the angle R_3 O R_4 shows at the same time the arc through which the crank passes during the time the admission of steam is going on.

It is more convenient to know the positions of the piston corresponding to these positions of the crank. To ascertain this, drop from R_3 and R_4 perpendiculars upon O X. In order to avoid covering the figure with too many lines, a line H K has been drawn parallel to O X, its length being made equal to the diameter of the crank-pin circle, and consequently to the stroke of the piston. Letting fall now from R_3 and R_4 the perpendicular R_3H_3 and R_4H_4 upon H K, there is shown:

H_3 the position of the piston at the beginning of the admission of the steam, and H_3 K the distance which the piston is that moment removed from the end of its stroke. By H_4 also is shown the position of the piston at the end of the admission of the steam; the proportion

Digitized by Google

between the distances K H_4 and K H *representing therefore the degree of expansion.*

The questions with regard to the exhaustion of the steam can be answered in an equally ready manner. Fig. 9 represents the valve in the position which it occupies when the exhaustion of steam is either just beginning or just ending, the valve having in this case travelled the distance $\xi = i$ from its central position. From Fig. 2, Pl. I., it may be seen that this equality of ξ and i takes place in the position corresponding to the two intersections W_3 and W_4 of the circles P_1 P P_2 and W_1 W W_3. Connecting therefore W_3 and W_4 with O, and producing this line backwards until it meets the circle described by the crank-pin, there is shown O R_5 the position of the crank, and H_5 the position of the piston at the beginning of the exhaustion of steam.

Fig. 9.

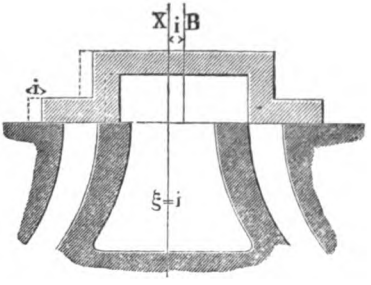

The exhaustion of the steam has already begun therefore, when the crank stands at the angle R O R_5 *before* the dead point, or when the piston has still to travel the distance H_5 K before reaching the end of its stroke.

O R_6 gives the position of the crank at the end of the exhaustion of steam, and H_6 the position of the piston at that moment. The proportion of K H_6 to K H represents the *degree of compression.*

It will be seen without anything further, that the expansion of the steam before the piston, and exhaustion of the steam behind it, take place while the crank passes through the angle R_4 O R_6, or while the piston travels the distance H_4H_6. When the crank has reached the position O R_6, the compression of steam behind the piston will commence.

All that has been said is right for the course of the piston from right towards left, and for the investigation of the further movement it is only required to produce the chief centre lines of the crank O R_5, O R_3, O R_4, O R_6 past O, until they again meet the crank-pin circle. R_7 lies thus in the production of O R_5, and O R_7 represents the

Digitized by Google

position of the crank at the beginning of the exhaustion of the steam on the *right*, when the piston travels from right towards left.

While the crank-pin passes through the arc $R_8 R_7$, compression will take place on the left-hand and expansion on the right-hand side of the piston.

If O R_3 is produced as far as R_9, O R_9 will represent the position occupied by the crank when the admission of steam begins on the left side of the piston; thus, while the crank passes through the arc $R_6 R_9$, compression of the steam takes place on the left of the piston.

In order that the Figure may be understood more readily, all the different occurrences are inscribed on it; the explanations outside around the crank-pin circle relate to the distribution of steam on the right-hand side of the piston, whilst the explanations written inside the circle relate to the distribution on the left-hand side.

In the manner already stated, *i. e.* by dropping from the different positions of the crank-pin perpendiculars upon the lines H K and $H_0 K_0$, the positions of the piston shown upon the first of these lines are those corresponding to the motion of the piston from right to left, whilst upon the latter line are marked the positions corresponding to the motion from left to right.

In fixing the positions of the piston in the above manner, no notice has been taken of the influence of the length of the connecting-rod; if, however, it is desired to allow for this influence, it is only necessary to consider that $R_1 R_3 R_4$ is the crank-pin circle, and O X_1 the direction of the piston-rod. In proceeding therefore in an exact manner, we have to take the length of the connecting-rod as a radius, and with the different points R, R_1, R_4, R_6 . . . . as centres, describe arcs cutting the line O X_1 produced. The points of intersection then give the positions of the piston exactly for the chief positions of the crank. For want of space, we have chosen on the Plate the more simple fixing of the positions of the piston.

It is scarcely necessary to point out how easily the influence of the inside and outside lap, of the angle of advance, &c., &c., may be perceived from Fig. 2, Plate I. For example, make the outside lap smaller than O V, then the circle, described with a radius equal to the new amount of outside lap (not shown in the Figure), will cut the

Digitized by Google

circle described from the centre C in points of the circumference of the latter, which are nearer to O than V_3 and V_4. Again connecting both points of intersection with O, the two connecting lines will form a larger angle than O V_3 and O V_4, *i. e.* admission of steam will take place during a longer time and the expansion will be less.

Let it be supposed, as another example, that there is no inside lap at all, the circle W W_2 W_4 would then disappear altogether, and a continued exhaustion of steam would take place.

In order that, at the beginning of the stroke of the piston, steam may be already on the reverse side of the latter, the port for the admission of the steam must at that moment be already opened, and we have seen that $V_1 P_1$ at once gives the size of this opening. It will be seen by the Figure that for the given condition O V_1 must be less than O P_1, *i. e.* the outside lap must be smaller than O P_1.

If no outside lap were given, a continued admission of steam would take place, and the admission would always change at the moment when the valve passed the middle of its stroke, or when the crank was in the position O R_0.

The alterations which occur in the distribution of the steam, if some of the dimensions r, δ, e or i are altered alone or several together, will be so easily seen from the simple diagram, that it is unnecessary that we should refer to it any further here. We may, however, make one remark as regards the *width of the steam ports; viz.* that it is very easy to fix through the diagram the moments at which the port for the admission or for the exhaustion of the steam are fully open, or at which the one or the other just begins to close. Fig. 10 shows half-size the principal parts of the diagram Fig. 2, Plate I. Lay out from V on O P_0 the distance V M = a = the width of a steam-port (which is in this case $a = 0{\cdot}030^m$, or 1·18 in.), and also from W the

Fig. 10.

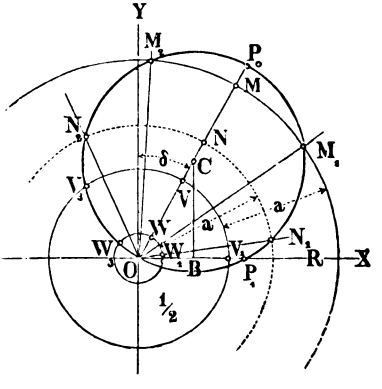

Digitized by Google

same distance W N, so that W N is also = a. Next describe from O circles with O M and O N as radii, and it will be easy to understand the correctness of the following: Take the points where these circles cut the valve circle, and then O M_1 will be the position of the crank when the port for the admission of steam is just full open, and O M_2 that when the port again becomes completely closed. While the crank passes through the arcs M_1 O M_2, the admission port is full opened; M P_0 shows, half-size in Fig. 10 and full-size in Fig. 2, Plate I., how far the outer edge of the valve has gone beyond the inner edge of the port at the time of largest opening.

The same process is applicable to the exhaust. When the crank is in the position O N_1 the port for the exhaustion is fully opened, and it remains so until the crank arrives at the position O N_2.

The preceding investigation will have proved how all the details in the distribution of the steam, effected by a simple valve-motion, may be quickly and correctly ascertained by the diagram; and it therefore only remains for us to show, how to fix upon the dimensions which are to be adopted for the valve-gear in such a manner, as to satisfy certain conditions with regard to the distribution of the steam.

Solutions of a few Problems.

Problem 1.—"In a simple slide-valve gear let the eccentricity $r = 0{\cdot}060^m$ (2·3 in.) and the angle of advance $\delta = 30^0$. Let also the admission of steam have to take place whilst the piston travels 0·8 of its stroke, and let the exhaustion of the steam have to begin, when the piston has still 0·04 of its stroke to travel. It is required to find the inside and outside lap, the inside and outside lead, the greatest opening of the steam-ports, &c., &c."

Solution.—Draw the two axes O X and O Y, Fig. 3, Plate I., perpendicular to each other; lay off from O Y the angle Y O $P_0 = \delta = 30^0$ and make O $P_0 = r = 0{\cdot}060^m$ (2·36 in.); bisect O P_0 in C and describe from C with O C = C P_0 as a radius the *valve-circle*. Next describe from O to any scale the circle R R_4 R_0, which represents the path of the crank-pin. We have made R $R_0 = 0{\cdot}100^m$. If we suppose now

Digitized by Google

that the crank turns in the direction of the arrow, and that the piston travels from right to left, then the exhaustion of steam will have to begin on the *left*, whilst the piston is still distant from the end of its stroke as much as 0·04 of its stroke, thus in the Figure the distance will be 0·04, multiplied by $0 \cdot 100 = 0 \cdot 004^{m}$ (·15 in.). If we make therefore $R H_3 = 4^{mm}$ (·15 in.), erect the perpendicular $H_3 R_3$ meeting the crank-pin circle in R_3 and draw $O R_3$, this line will represent the position of the crank before the dead point at which the exhaustion of the steam begins. The line $O R_3$ cuts the valve-circle at W_3, and $O W_3$ is the required inside lap. Now while the piston travels from right to left, it is required that the admission of the steam shall cease when the piston has passed through 0·8 of its stroke. Making therefore $R H_4 = 0 \cdot 8 \times R R_0 = 0 \cdot 8 \times 0 \cdot 1 = 0 \cdot 08^{m}$ (3·15 in.) and erecting the perpendicular $H_4 R_4$, we get by drawing the line $O R_4$ the position of the crank at the end of the admission of the steam, or at the beginning of the expansion. This line $O R_4$ cuts the valve-circle at V_4, so that $O V_4$ gives at once the required outside lap e. We must next describe from O circles with the inside lap $O W_3 = i$ and the outside lap $O V_4 = e$ as radii, and the whole problem is then solved, for we have at once all required sizes; *viz.* they are, if we put together the measurements as taken from Fig. 3, Plate I.:

Outside Lap	$O V_4$	$= 0 \cdot 024^{m}$ (0·94 in.)
Inside Lap	$O W_3$	$= 0 \cdot 007^{m}$ (0·27 in.)
Outside Lead	$P_1 V_1$	$= 0 \cdot 006^{m}$ (0·23 in.)
Inside Lead	$P_1 W_1$	$= 0 \cdot 023^{m}$ (0·903 in.)
Greatest Opening of the Port for Admission	$P_0 V$	$= 0 \cdot 036^{m}$ (1·42 in.)

At the same time answers may be obtained, according to that which has been stated with reference to Fig. 2, Plate I., to all other questions in regard to the distribution of steam and to the positions of the piston, but which we cannot repeat here.

In order to solve the same problem generally, by calculation, it would be necessary to proceed as follows: Let s_1 be the travel of the piston during the admission, *i. e.* up to the beginning of the expansion, R = the radius of the crank, and ω_1 = the angle through which the crank has turned, measured from the dead point up to the beginning

Digitized by Google

of the expansion, then there exists (supposing that there is a long connecting rod) the relation:

$$s_1 = R\,(1 - \cos \omega_1)$$

but the full travel of the piston is

$$s = 2\,R.$$

whence follows, by division, the degree of expansion:

$$\frac{s_1}{s} = \frac{1 - \cos \omega_1}{2} = \sin^2 \frac{1}{2}\,\omega_1$$

and the angular movement ω_1 up to the beginning of the expansion is therefore calculated from the degree of expansion according to the formula:

$$\sin \frac{1}{2}\,\omega_1 = \sqrt{\frac{s_1}{s}}$$

Next let the travel of the piston up to the beginning of the exhaustion of the steam $= s_3$, and the corresponding angular movement of the crank $= \omega_3$, we then get in the same manner:

$$\sin \frac{1}{2}\,\omega_3 = \sqrt{\frac{s_3}{s}}.$$

But the travel of the valve for the angle ω, is in general,

$$\xi = r \sin (\omega + \delta).$$

But at the beginning of the expansion it is, as was found by the diagram, $\xi = e$, and at the beginning of the exhaustion of the steam, *i. e.* for $\omega = \omega_3$, it is $\xi = -i$, and we obtain therefore at once (as r and δ are considered as known) for the calculation of the outside and inside lap the two formulas:

$$e = r \sin (\omega_1 + \delta) \text{ and } i = -r \sin (\omega_3 + \delta).$$

At the beginning of the stroke $\omega = o$, and therefore the travel of the valve $\xi = r \sin \delta$, whence may be calculated the outside lead $= r \sin \delta - e$ and the inside lead $= r \sin \delta - i$.

Problem 2.—"To fix the radius r of the eccentricity and the angle of advance δ, if in a slide-valve gear with one eccentric the dimensions of the valve (*i. e.* the inside and outside lap, or i and e) are given, and if also it is required that the degree of expansion be $\frac{s_1}{s}$ and the opening of the entrance port at the beginning of the stroke of the piston,

Digitized by Google

or the lead be $= v$. For instance, let e be taken $= 0{\cdot}024^{m}$ ($\cdot 94''$); $i = 0{\cdot}007^{m}$ ($\cdot 272''$); $v = 0{\cdot}006^{m}$ ($\cdot 23''$) and $\frac{s_1}{s} = 0{\cdot}80$."

Solution.—The solution is reduced to the ascertaining of the position of the centre C of the valve-circle (Fig. 3, Plate I.). If this position is known, then C O $= \rho$ is the half of the required eccentricity, and the angle Y O C $= \delta$ is the angle of advance.

Let the point O be taken as centre of the axle, draw O X and perpendicular to it O Y; describe now from O with the outside lap $e = 0{,}024^{m}$ ($\cdot 94''$) and the inside lap $i = 0{\cdot}007^{m}$ ($\cdot 275''$) as radii the circles V_1 V V_4 and W_1 W W_4, then describe also from O to any other convenient scale, or preferably with the radius $0{\cdot}050^{m}$ ($1{\cdot}97''$) a circle, which represents the crank-pin circle R R_4 R_0.

According to the problem, the distribution of steam shall be such that the degree of expansion $\frac{s_1}{s} = 0{\cdot}8$, in fixing therefore the point H_4 in the diameter R R_0 so that R H_4 : R $R_0 = s_1 : s$, H_4 will give the position of the piston at the end of the admission of the steam; as in the present case $s = 0{\cdot}100^{m}$ ($3{\cdot}93''$) it is simply necessary to make $s_1 = R\ H_4 = 0{\cdot}080^{m}$ ($3{\cdot}15''$); and drawing from H_4 the perpendicular $H_4 R_4$, a line O R_4 will represent the corresponding position of the crank.

The line O R_4 cuts the circle described with the outside lap at V_4, and that is, as is known from preceding observations, a point through which the required valve-circle passes.

According to the other conditions of the problem, the opening of the steam-port at the beginning of the stroke shall be $v = 0{\cdot}006^{m}$ ($\cdot 23''$); making therefore $V_1 P_1 = v$, where O $V_1 = e$ is known, we get at P_1 a second point through which the valve-circle passes, but this circle passes also through O; if therefore we describe through the points V_4, O and P_1 a circle, it will be the required valve-circle, and therefore C O Y will be the required angle of advance δ, and O P_0 the required eccentricity r. The measurements give $\delta = 30°$ and $r = 0{\cdot}060^{m}$ ($2{\cdot}36''$).

By fixing the points where the valve-circle cuts the other circles, we are able, as explained in the previous investigation, to answer any questions which may arise.

Digitized by Google

Again, in order to solve this problem by calculation, we should first ascertain through the known degree of expansion, as in the first problem, the angular movement of the crank up to the beginning of the expansion, according to the following formula:

$$\sin \frac{1}{2} \omega_1 = \sqrt{\frac{s_1}{s}};$$

further, the travel of the valve at the beginning of expansion is

$$e = r \sin (\omega_1 + \delta)$$

and if the outside lap v is given, the travel of the valve at the beginning of the stroke of the piston is

$$e + v = r \sin \delta.$$

Through the two last equations the two unknown quantities r and δ may easily be found.

The angle of advance δ is, as will be easily seen by the equation:

$$\operatorname{cotg.} \delta = \frac{e}{(e + v) \sin \omega_1} - \operatorname{cotg.} \omega_1$$

and next the eccentricity is given by the formula:

$$r = \frac{e + v}{\sin \delta}.$$

Problem 3.—"Let there be given for the designing of a simple valve-gear the degree of expansion $\epsilon = \frac{s_1}{s}$, and further *the angle of lead* γ, *i. e.* the angle $R_4 O X$ (Fig. 11), at which the crank stands *before* the dead point at the *beginning of the admission of the steam.* Finally, let there be also given the width of the ports $V M = a$ and the distance $M P = K$, at which the outer edge of the valve, at its greatest distance from the central position stands beyond the inner edge of the admission-port.

Fig. 11.

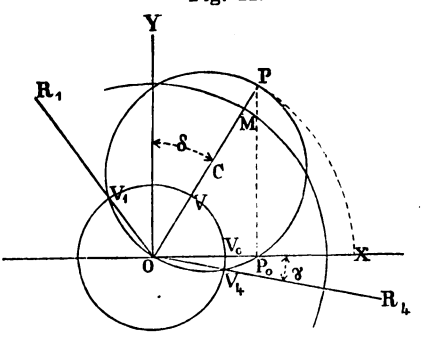

"Then there is to be determined the eccentricity $O P = r$, the

Digitized by Google

advance $Y\,O\,P = \delta$, the outside lap $O\,V_1 = O\,V_4 = e$, and the outside lead $V_0\,P_0 = v$."

Solution. In this and the following problem it is best to combine construction and calculation.

Fix at first the position of the crank $O\,R_1$, or the angle $X\,O\,R_1 = \omega_1$ for the beginning of the expansion, through the already explained method of construction, or through calculation according to the formula previously obtained:

$$\sin \frac{\omega_1}{2} = \sqrt{\frac{s_1}{s}}.$$

Next lay down the angle of lead $X\,O\,R_4 = \gamma$, and bisect the angle $R_1\,O\,R_4$; the bisecting-line $O\,P$ gives at once the direction of the eccentricity, and the angle $Y\,O\,P$ therefore is equal to the angle of advance δ. The latter may be also found through calculation very simply according to the formula:

$$\delta = 90 - \frac{\omega_1 - \gamma}{2}.$$

For the beginning of the expansion we must, in the general formula $\xi = r \sin(\omega + \delta)$, substitute e for ξ and ω_1 for ω, and we get:

$$e = r \sin(\omega_1 + \delta).$$

Next follows, as shown in Fig. 11, for the greatest distance of the valve from its central position:

$$r = e + a + k.$$

By combining these two equations and using at the same time the formula for δ, we get after simple reduction:

$$2r = \frac{a + k}{\sin^2 \frac{\omega_1 + \gamma}{4}}.$$

From this equation the eccentricity $O\,P = r$ may be calculated with facility (or may be constructed according to its direction).

By describing now the valve-circle on $O\,P$, Fig. 11, the two points of intersection V_1 and V_4 upon the crank-lines $O\,R_1$ and $O\,R_4$ are

Digitized by Google

obtained, and the lengths $O V_1$ and $O V_4$ represent the outside lap e, whilst $V_0 P_0$ is the required outside lead.

Finally, we may also determine the inside lap, and thus complete the diagram.

Problem 4.—"Let it be required to obtain with a simple valve-gear the degree of expansion $\epsilon = \frac{s_1}{s}$; and further let there be given the outside lead $V_0 P_0 = v$ (Fig. 11), the width of ports $V M = a$, and the distance $M P = k$, to which the outer edge of the valve at the largest travel of the valve shall have passed beyond the inner edge of the steam-port.

"It is required to fix the radius of eccentricity r, the angle of advance δ, the outside lap e, and the angle of lead γ."*

Solution.—In dealing with the above problem we obtain a result in the easiest and best manner, if we calculate the eccentricity r and try to get the other unknown quantities by construction.

The formula, according to which r is calculated, may be found as follows:

For the beginning of the stroke of the piston we must, in the general equation of the travel of the valve $\xi = r \sin(\omega + \delta)$, substitute o for ω, and (Fig. 11) $e + v$ for ξ, and get:

$$e + v = r \sin \delta.$$

Next is to be found, either by calculation or construction, the angular movement of the crank up to the beginning of the expansion, and $\xi = e$, therefore

$$e = r \sin(\omega_1 + \delta).$$

Finally, the greatest travel of the valve according to the diagram (Fig. 11) is

$$r = e + a + k.$$

From these three equations we have to find the three unknown-

* The above-given problem was solved first by *Redtenbacher* ('Gesetze des Locomotivbaues,' p. 107) only through calculation; later the engineer Herrmann gave in the 'Zeitschrift des österreichischen Ingenieur-Vereines,' 1859, vol. ix., p. 81, and Professor Grashof in the 'Zeitschrift des Vereines deutscher Ingenieure,' 1859, vol. iii., p. 294, a real graphical solution of the same problem.

Digitized by Google

quantities r, δ and e. Let the value for e, obtained from the last equation, be substituted in the two first ones, whence follows:

$$r\,(1 - \sin\delta) = a + k - v \qquad (\alpha)$$

and

$$r\,[1 - \sin(\omega_1 + \delta)] = a + k \qquad (\beta).$$

In order now to find r from these two equations, δ has to disappear. Use can be made here of the known formula:

$$1 - \sin x = 2\sin^2\left(\frac{\pi}{4} - \frac{x}{2}\right)$$

and thus there can be obtained from equation (α):

$$\sin\left(\frac{\pi}{4} - \frac{\delta}{2}\right) = \sqrt{\frac{a + k - v}{2r}}$$

and

$$\cos\left(\frac{\pi}{4} - \frac{\delta}{2}\right) = \sqrt{\frac{2r - (a + k - v)}{2r}}.$$

But the equation (β) gives:

$$\sin\left(\frac{\pi}{4} - \frac{\delta}{2} + \frac{\omega_1}{2}\right) = \sqrt{\frac{a + k}{2r}}$$

or:

$$\sin\left(\frac{\pi}{4} - \frac{\delta}{2}\right)\cos\frac{\omega_1}{2} + \cos\left(\frac{\pi}{4} - \frac{\delta}{2}\right)\sin\frac{\omega_1}{2} = \sqrt{\frac{a + k}{2r}}.$$

By using in the formula the two expressions above given, and by considering that here, as in the previous problems,

$$\sin\frac{\omega_1}{2} = \sqrt{\frac{\varepsilon_1}{\varepsilon}} = \sqrt{\varepsilon} \text{ and therefore } \cos\frac{\omega_1}{2} = \sqrt{1 - \varepsilon}$$

we get after easy reduction:

$$\sqrt{1 - \varepsilon}\,\sqrt{a + k - v} + \sqrt{\varepsilon}\,\sqrt{2r - (a + k - v)} = \sqrt{a + k}$$

whence follows:

$$r = \frac{2(a + k) - v + 2\sqrt{(a + k)(a + k - v)(1 - \varepsilon)}}{2\varepsilon}.$$

We can now calculate by this formula the eccentricity r, and as for the rest use the system of construction.

After drawing the two axes O X and O Y (Fig. 11), describe from

Digitized by Google

O, with the radius O X = O P = r, a circle (shown in the Figure by dotted lines), mark from X towards O the value $a + k$, then the outside lap O $V_0 = e$ is obtained, with which we can describe from O the corresponding circle (lap circle).

Next mark from V_0 towards X the outside lead $V_0 P_0 = v$, and draw at P_0 a perpendicular $P_0 P$ reaching the circle, described with r at P; then O P will be the real direction of the eccentricity r, P O Y will be the required angle of advance δ, and the circle described on O P from the centre C will be the valve circle. The points V_1 and V_4 give thus the positions of the crank O R_1 and O R_4 for the beginning of the expansion and the admission of the steam, and the angle X O R_4 is the required angle of lead. The completion of the diagram requires only the determination of the inside lap.

If, for example, we take the degree of expansion $\epsilon = 0{\cdot}8$, the outside lead $v = 0{\cdot}006^m$ (·23 in.), the width of ports $a = 0{\cdot}030^m$ and the distance to which the valve at its greatest travel shall traverse beyond the inner edge of the entrance port, $k = 0{\cdot}006^m$ (·23″), then the above formula gives for r:

$$r = 0{\cdot}060^m \ (2{\cdot}36 \text{ in.})$$

and from the given construction follows:

$$e = 0{\cdot}024 \text{ and } \delta = 30^0,$$

which values may also be obtained through calculation from the formulas:

$$e = r - (a + k) \text{ and}$$

$$\sin \delta = \frac{e + v}{r}.$$

Practical Notes on the Designing of Valve-gears.

In executed valve-gears it is generally found that the eccentricity r = from $0{\cdot}050^m$ (1·96″) to $0{\cdot}080^m$ (3·14″), that the angle of advance = from 10^0 to 30^0, and that the outside lead = from $0{\cdot}003^m$ (·118″) to $0{\cdot}006^m$ (·23″).

The width of the steam-ports, measured in the direction of the

Digitized by Google

motion of the valve, is generally from 0·030^{m} to 0·050^{m} (1·18″ to 1·97″).

Finally, after all these dimensions are fixed, there only remains to be determined the width b of the bridges and the size o_0 of the exhaust-port (Fig. 12). Of course, the bridge must be wider than the length M P (Fig. 11, page 32), because otherwise the valve would open the exhaust-port and allow the steam to escape into the air.

Fig. 12.

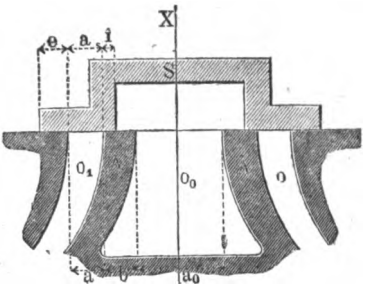

As the greatest distance of the valve from its central position is given by the eccentricity r, it will be seen that

$$e + a + b \text{ must be greater than } r;$$

therefore

$$b \text{ is greater than } r - (e + a).$$

Useful proportions for this width b may be obtained by applying the following empirical formula:

$$b = 10 + 0{\cdot}5\ a \text{ in millimetres,}$$

in which the width a of the entrance-port is to be taken in millimetres.

Making also the width a_0 of the exhaust-port

$$a_0 = r + a + i - b,$$

the valve itself at its farthest travel will only reduce the exhaust-port as much as the width of the entrance-port. For the case observed in the above Problem 2 we had as an example

$$r = 60^{mm},\ e = 24^{mm},\ i = 7^{mm},$$

and taking the width of the entrance-port $a = 30^{mm}$, we get according to the preceding formula the width b of the bridges:

$$b = 10 + 0{\cdot}5 \cdot 30 = 25^{mm}\ (\cdot 985''),$$

and the width of the exhaust-port:

$$a_0 = 60 + 30 + 7 - 25 = 72^{mm}\ (2{\cdot}808'').$$

Digitized by Google

A further question, and one which moreover often presents great difficulties to the beginner, is that respecting the angle, which the centre line of the eccentric should make with that of the crank, or in other words, how the eccentric is to be keyed to the axle with reference to the position of the crank, if a certain angle of advance is given. The rules which here follow are very simple, and long experiments on models are quite unnecessary for obtaining a clear understanding upon this question.

In practice, almost all the cases which occur may be divided into two classes, which are represented in Figs. 13 and 14. Thus the eccentric may act through the eccentric rod either upon the bell-crank lever A C B (Fig. 13), or upon the double lever A C B (Fig. 14).

Let us first consider the case shown in Fig. 13. There is always given the position and direction of the valve-face B X, as well as the position of the centre O of the axle and the direction O Z of the axis of the steam-cylinder.

Fig. 13.

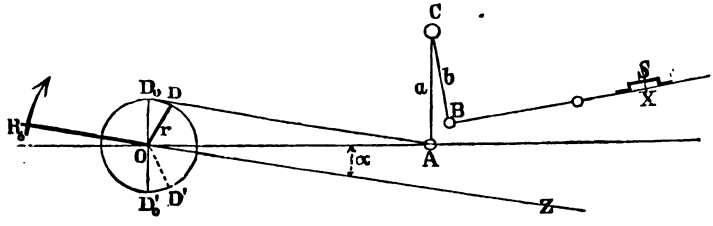

Choose the direction O A, in which the end A of the eccentric rod shall swing backwards and forwards; draw the valve S in its central position and choose two points B and A, the first in the direction of the valve-face, the other in the chosen direction O A; erect on the lines representing these directions the perpendiculars B C and A C, and then C will be the position of the fulcrum of the bell-crank lever A C B, which the perpendiculars represent in that position which it occupies when the valve stands in its central position. Draw now from the centre O the line O D_0 at right angles to the chosen direction O A, and make O D_0 equal to the eccentricity r;

Digitized by Google

then the connecting line $D_0 A$ gives the length of the eccentric-rod. Produce O Z, which represents the axis of the cylinder past O, and mark upon this part produced the crank $O R_0$ as occupying one of its dead points; if we draw now the line $O D = r$ so that it forms with the line $O D_0$ the angle $D_0 O D = \delta$ equal to the angle of advance, then, supposing the crank is to move in the direction of the arrow, the angle $R_0 O D$ is that by which the centre line of the eccentric must precede the crank. The difference between the two directions will be, if the axis of the cylinder O Z differs from the chosen direction O A by the angle α,

$$\text{angle } R_0 O D = 90 + \delta - \alpha.$$

If, however, the engine runs in the other direction, the reverse to the arrow, the perpendicular $O D_0$ must be drawn downwards, and the centre line of the eccentric r must be put in the position O D′ (shown in the figure in dotted lines), so that the angle $D_0' O D'$ becomes equal to δ and the centre line of the eccentric *precedes* the crank by the angle

$$R_0 O D' = 90 + \delta + \alpha.$$

If in the present case the valve-face B X was parallel to the accepted direction O A, the joint B of the valve-rod would be in the line A C, and the bell-crank lever would become simply a single-acting lever. But in most cases the direction B X coincides with the direction O A, when B C = A C, and the lever is omitted altogether, a separate guide for the end of the eccentric rod being no longer required.

The second case, as represented in Fig. 14, may be treated in a similar manner. Let there be again given the centre of the axle O and the direction B X of the valve-face, and O Z of the axis of the cylinder.

Choose as before the direction O A in which the end-point A of the eccentric rod shall move; draw the valve S in the central position, and B C perpendicular to B X, and A C perpendicular to O A; A C B is then the double lever with the fulcrum C, which transfers the eccentric motion to the valve, the lever being in its central position. By drawing now $O D_0 = r$ perpendicular to O A, the connecting-line

Digitized by Google

$D_0 A$ again gives the length of the eccentric rod. Continue as in the first case the line $O Z$; mark the crank $O R_0$ in the one of its dead-points, and draw the line $O D = r$, the eccentricity, so that it forms with $O D_0$ the angle $D_0 O D = \delta$, the angle of advance, it being sup-

Fig. 14.

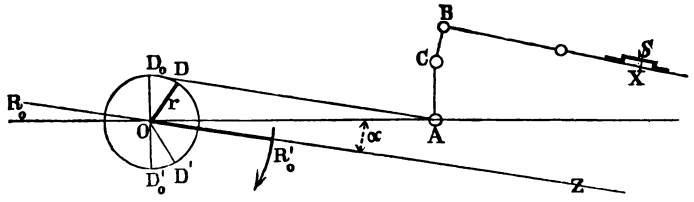

posed that the crank moves in the direction indicated by the arrow. If, however, the crank moves in the reverse direction, draw the line $O D' = r$, as in the previous case.

But in the present instance the crank must be turned for 180°, because the moving-direction of the valve is reversed through the double lever; the crank must therefore, for the given position of the eccentric, be placed in *the direction* $O R_0'$, and it will be found that the eccentricity $O D = r$, on the movement of the crank in the direction indicated by the arrows, follows *behind* the crank at the fixed angle:

$$R_0' O D = 90 - \delta + \alpha.$$

But when the crank revolves in the reverse direction, the angle will be

$$R_0' O D' = 90 - \delta - \alpha.$$

If we call the arms A C and B C in both cases a and b, the movement of the valve will be

$$\xi = \frac{b}{a} r \sin(\omega + \delta).$$

In drawing out the diagram, therefore, the diameter of the valve-circle is to be taken as $\frac{b}{a} r$, but nothing else is to be altered in the rules for designing and the use of the diagram. In all our investi-

Digitized by Google

gations we have considered the simpler and most frequently occurring case, and tacitly accepted that $a = b$, and that the direction of the valve-face coincided with the direction O A, or in other words, that the end of the eccentric rod acted directly on the end of the valve-rod.

CHAPTER II.

On the "Missing Quantity" in the Formula of the Simple Valve-motion.

In our earlier investigations we found for the travel of the valve the equation (I^b).

$$\xi = r \sin \delta \cos \omega + r \cos \delta \sin \omega + \frac{r^2}{2\,l} \sin \omega \sin (2\,\delta + \omega).$$

We neglected in the preceding investigations the third quantity, because it is in most cases very small; and the two first quantities then formed the polar equation of two circles, which explained to us the whole distribution of steam: it appearing that the valve swung symmetrically backwards and forwards on both sides of a point, which laid at a fixed distance from the centre of the axle.

This swinging motion is, however, in reality, strictly taken, not so regular, for the quantity

$$\frac{r^2}{2\,l} \sin \omega \sin (2\,\delta + \omega)$$

cannot be made under the usual arrangements to disappear altogether. But generally the length l of the eccentric rod is very large in proportion to the eccentricity r, and the disadvantageous influence of this quantity nearly disappears altogether in practice. Notwithstanding this, it seems important to us to examine the influence of this quantity more closely, as we can get from it a practical rule, and as the exact movement of the valve will be thus brought before our eyes.

We found on page 10 that the distance of the central position B of the valve from the centre of the axle D would, when the crank had moved through the angle ω (Fig. 15), be:

$$\text{O B} = r \sin (\omega + \delta) + l + l_1 - \frac{r^2 \cos^2 (\omega + \delta)}{2\,l}.$$

Digitized by Google

Substituting for ω in this equation $180 + \omega$, and supposing

Fig. 15.

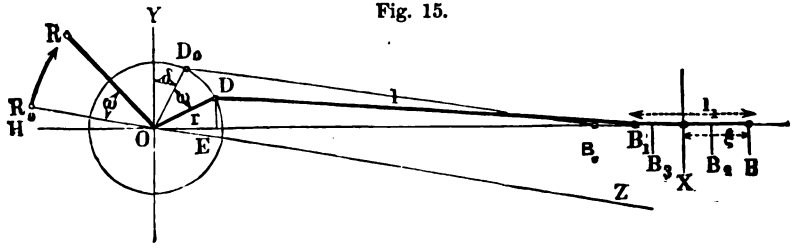

therefore the crank turned through 180°, we get the distance, if we then take the centre of the valve in B_0:

$$O B_0 = r \sin (180 + \omega + \delta) + l + l_1 - \frac{r^2 \cos^2 (180 + \omega + \delta)}{2 l}.$$

But the average of both values gives the distance of the bisecting point of the line $B B_0$ from O; calling this distance $O X_1$, we get after some reductions:

$$O X_1 = l + l_1 - \frac{r^2 \cos^2 (\omega + \delta)}{2 l}. \qquad (6)$$

Strictly, if X_1 was nothing else but the centre of motion, $O X_1$ would therefore be its distance from the centre of the axle. But as ω occurs in the corresponding formula, it will be seen that $O X_1$ is variable, and *that therefore the position of the centre of motion is likewise variable.*

We have already found the distance of the centre of motion, according to equation (1), p. 11

$$O X = l + l_1 - \frac{r^2 \cos^2 \delta}{2 l},$$

in ascertaining the positions of the valve for $\omega = 0$ and $\omega = 180°$, and taking the central point between these as the fixed centre of motion. We based this observation upon the procedure in practice, according to which the valve is adjusted in the following manner: The crank is placed at the dead point, and the lead measured, *i.e.* the opening of the entrance-port for this position of the crank; the crank is next placed on the second dead point, and the corresponding

Digitized by Google

lead measured, and the valve-spindle is then shortened or lengthened till the lead on both sides is equal. This is also, as will be shown, the most correct way, and coincides perfectly with our method of determining the position of the point X.

When the "missing quantity" was neglected, the obtained centre was X; but when this quantity is taken into consideration, the actual position of the centre of motion X_1 will be found to be removed towards X, and the amounts by which it is thus shifted are simply:

$$z = O X_1 - O X = \frac{r^2}{2l}\left[\cos^2\delta - \cos^2(\omega + \delta)\right],$$

or after a few reductions:

$$z = \frac{r^2}{2l} \sin\omega \sin(2\delta + \omega), \qquad (7)$$

and that is *nothing else,* but *the missing quantity itself.* An examination of this equation therefore will give a complete explanation of the movement of the variable centre of motion X_1 with regard to our fixed centre X.

Both coincide, or $z = 0$, if $\omega = 0^0$, $(180 - 2\delta)$, 180^0 and $(360 - 2\delta)$, *i.e.* therefore, if the crank stands *on the dead points* or as much as 2δ *before them.*

The "missing quantity" is a maximum or the difference z between the positions of the two points X and X_1 is the largest, if

$$\sin\omega \sin(2\delta + \omega) = \text{maximum},$$

or as the differential calculus gives, if

$$\sin 2(\delta + \omega) = 0.$$

This gives again four angles, *viz.:*

$$\omega = (90 - \delta);\ (180 - \delta);\ (270 - \delta);\ \text{and}\ (360 - \delta).$$

The two angles $90 - \delta$ and $270 - \delta$ give the largest value of z

$$z_{max} = + \frac{r^2}{2l} \cos^2\delta. \qquad (8)$$

The two other angles $(180 - \delta)$ and $(360 - \delta)$ give

$$z_{max} = - \frac{r^2}{2l} \sin^2\delta. \qquad (9)$$

Digitized by Google

But the diagram (Fig. 2, Plate I.) shows that just at the angles $90-\delta$ and $270-\delta$, the largest opening of the ports takes place, and the valve being at the extremities of its stroke, travels a small distance beyond the edge of the port; whether now the valve travels in consequence of the missing quantity as much as $\frac{r^2}{2l} \cos^2 \delta$ farther or less is a matter of no importance whatever. The greatest difference between the positions of the points X and X_1 takes place therefore just at a place where it cannot influence the distribution of the steam.

The circumstances are similarly favourable in the cases where the second maximum difference occurs.

This second difference takes place at the angles $180-\delta$ and $360-\delta$; but according to the diagram, these angles represent those positions of the crank, at which the valve is just at the middle of its stroke, both ports being therefore closed. The effect of the above difference is, that the valve at these moments has not yet quite reached the position it otherwise would have, but is still distant from it to the small extent $\frac{r^2}{2l} \sin^2 \delta$; but as the ports are closed at these positions by the lap, the disturbance in this case also occurs at a time when it is least felt.*

We have now seen that the greatest differences from the results given by our diagram, take place in points where they are without unfavourable influence upon the distribution of the steam; the reason for this lies principally in the correct fixing of the centre of motion, or in other words, in the manner of adjusting, as explained above. From this follows the practical rule, always *to adjust the valves so that the lead is equal on both sides.*

In order to get a complete view of the influence of the missing quantity upon the entire distribution of the steam, the exact values of ξ must be calculated for different values of ω, according to equation (I*), and the curve be drawn to polar co-ordinates. Instead of the two circles, a curve is obtained which likewise represents the shape of

* If the laps are very small, perhaps *nil*, as is often the case with the inside lap, then of course an unfavourable distribution of the steam may be expected in consequence of the effect of the missing quantity. It is therefore advisable, when great eccentricities and short eccentric rods are employed to make the laps always larger than usual.

Digitized by Google

an 8; and this curve then explains exactly in place of the two valve-circles, in connection with the other circles, according to the instructions given with regard to Fig. 2, Plate I., the distribution of the steam.

We do not enter upon this question more minutely, as it is of no further use. If the proportion $\frac{r}{l}$ is in any way small enough, there exists no reason for regarding the "missing quantity", and thus making the investigation more difficult.

Representation of the Distribution of the Steam by means of Valve-ellipses.

The simple diagram for the movement of the slide-valve already described and examined gives us, first of all, in a very simple manner, for any angle ω of the position of the crank, the distance of the valve from its central position, or as we may say, it represents *the travel of the valve* ξ *as a function of the angular movement* ω. If the angle ω is given, it is easy to fix the position which the piston at the same moment occupies in the cylinder. It may be now desirable to show directly, graphically, the relation which takes place between the travel of the valve and the stroke of the piston; and for such a purpose, a system of rectangular co-ordinates is to be adopted, in which the stroke of the piston is taken as abscissa and the travel of the valve as ordinate; and the different points obtained in this manner for different angular movements are connected by a curve.

We will now consider more closely this mode of representation, which was formerly generally used and which is still applied by a few authors. Let (Fig. 16) A B be the full stroke of the piston, drawn to a reduced scale, and on A B as a diameter and from O, with the radius O A = O B = O R = R, let there be described a circle. Let O R be supposed to represent the crank, and let it have moved from the position O A (on the dead point) as much as the angle A O R = ω, then the perpendicular R M gives at once in the part A M = s of the line A B the *travel of the piston*. This line may be taken as an abscissa, if A is taken as the point at which the co-ordinates shall

Digitized by Google

commence, and if also, as we shall for simplicity suppose here, the connecting rod is taken as infinitely long. Let us draw now to the

Fig. 16.

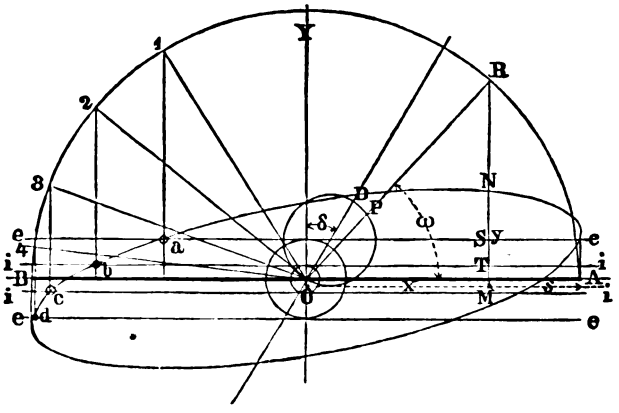

same or any other scale, the ordinate M N representing the movement of the valve ξ, corresponding to this position of the crank. This movement of the valve may be either calculated by the formula $\xi = r \sin(\omega + \delta)$, or it may be obtained on a graphical manner by our polar diagram. In the latter case, draw from O the perpendicular O Y, and draw next the line O D = r = the eccentricity in such direction, that the angle Y O D becomes equal to δ = the angle of advance. The radius vector O P, falling in the direction of the crank O R, and belonging to a circle described on O D, thus gives at once the required ordinate M N.

Fixing in this way a series of points like N, and connecting them by a line, we obtain a closed curve which, as may easily be proved, is an ellipse, and which is called the valve-ellipse. If we now shift the point of commencement for the co-ordinates to the centre O, and take O M = x as the abscissa of the point N, we then find at once (this being exact only for connecting rods of infinite length).

$$x = R \cos \omega,$$

while the ordinate, which we call *ad interim* y,

$$y = \xi = r \sin(\omega + \delta).$$

Digitized by Google

Eliminating from both equations the angle ω, we get after a few reductions:

$$R^2 y^2 - 2 R r y x \sin \delta + r^2 x^2 - R^2 r^2 \cos^2 \delta = 0$$

and that is, as may easily be proved, the equation of an ellipse from the centre, but in which the axes of the co-ordinates do not coincide with the chief axis.* The ordinates of the different points of that part of the ellipse situated above A B, represent the movements of the valve towards the one, and the ordinates of the points below A B the movements towards the other side of the centre of motion. By drawing the parallel lines *e e* and *e e* at a distance equal to the outside lap *e* above and below A B, and also the parallel lines *i i* and *i i* at a distance *i* equal to the inside lap, the distribution of the steam is given, and it will be found, according to that which has been stated on page 23, that the opening of the entrance-port for the position M of the piston during the stroke of the piston from A to B is given by the part N S of the ordinate M N, and the opening of the exhaust-port by the part N T of the same ordinate. Further, it is easy to understand that the points *a*, *b*, *c*, and *d* indicate successively the position of the piston for the beginning of the expansion, of the compression, of the exhaustion before, and of the admission of the steam behind the piston. By producing the perpendiculars which stand upon A B and pass through these points so far that they meet the crank-pin circle, we obtain for these four chief points in the distribution of the steam, the positions of the crank O 1, O 2, O 3, and O 4. We, however, found these positions more simply in our polar diagram through the points in which the valve-circles and the two circles described with the lap crossed each other. In fact, this method of representing the movement of the

* Calling the angle to which the greater demi-axis of this ellipse deviates from the axis of abscissa A B, φ, then is according to known mathematical thesis:

$$tg.\, 2\varphi = \frac{2 R r \sin \delta}{R^2 - r^2};$$

the greater demi-axis a is found by the equation:

$$a^2 = \frac{2 R^2 r^2 \cos^2 \delta}{R^2 + r^2 - \sqrt{(R^2 + r^2)^2 - 4 R^2 r^2 \cos^2 \delta}}$$

and the smaller demi-axis b by the formula:

$$b^2 = \frac{2 R^2 r^2 \cos^2 \delta}{R^2 + r^2 + \sqrt{(R^2 + r^2)^2 - 4 R^2 r^2 \cos^2 \delta}}.$$

Digitized by Google

valve by an ellipse does not give a better view of the matter than our former diagram, and it is not to be recommended for practical application, on account of the greater difficulty of construction.

For those valve-gears, in which the angle of advance and eccentricity are variable, this method is without any value; for each separate case would require the construction of a special ellipse, a work which requires much time and which does not give the necessary exactness in the measurements; besides, the figure would be covered with so many lines and curves that it would be rendered difficult to understand.

The Diagram by Reuleaux.

A diagram different from that above described, and which gives, with equal facility, answers to all questions arising with regard to the distribution of the steam and the influence of different dimensions in a simple valve-gear, has been invented by Professor Reuleaux. In the following description of this diagram by Reuleaux, the same designations are employed, so as to facilitate the comparison with the other diagram.

The travel of the valve has been shown, according to previous formulas, to be:

$$\xi = r \sin \delta \cos \omega + r \cos \delta \sin \omega \qquad \text{(p. 12)}$$

or as we can also write:

$$\xi = r \sin (\delta + \omega).$$

The opening of the entrance-port at the angle ω was:

$$\xi - e = r \sin (\delta + \omega) - e \qquad \text{(p. 23)}$$

and the corresponding opening of the exhaust-port:

$$\xi - i = r \sin (\delta + \omega) - i.$$

Now in order to save calculations and to obtain through the diagram a complete insight into the matter, we proceed according to Reuleaux as follows: Draw the two axes O X and O Y at right angles

Digitized by Google

to each other (Fig. 17), take O as the centre of the axle, and draw

Fig. 17.

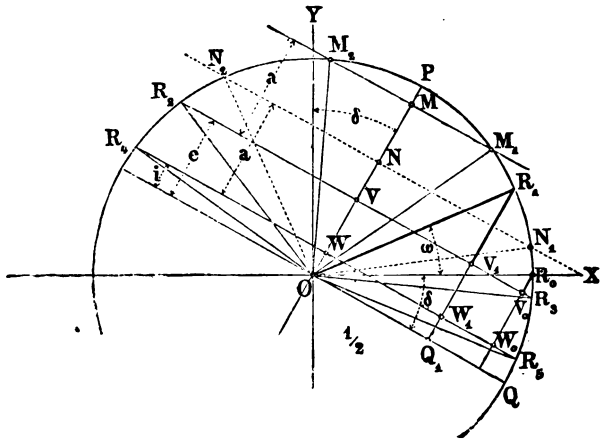

the lines O P and O Q in such a way that they form with O Y and O X the angles

$$Y\,O\,P = X\,O\,Q = \delta,$$

i. e. equal to the angle of advance. Describe now from O with the radius of the eccentricity r, thus with $O\,R = r$, a circle, and suppose the crank to be in the position O X on the one of its dead points. Next draw parallel to the line O Q at the distance $O\,W = i$ = the inside lap, the line $R_4\,R_5$; and also at the distance $O\,V = e$ = the outside lap, the line $R_2\,R_3$, and finally at the distance $V\,M = a$ = the width of the entrance port, from $R_2\,R_3$ the line $M_1\,M_2$, and the diagram is then completed.

Suppose the crank to have turned through the angle $X\,O\,R_1 = \omega$, and to be thus in the position $O\,R_1$, and drop from R_1 the perpendicular $R_1\,Q_1$ towards O Q, then we have simply:

$$R_1\,Q_1 = r\ sin\ (\omega + \delta)$$

the travel of the valve, as well as

$$R_1\,V_1 = R_1\,Q_1 - Q_1\,V_1 = r\ sin\ (\omega + \delta) - e$$

the opening of the entrance-port, and finally

$$R_1\,W_1 = R_1\,Q_1 - Q_1\,W_1 = r\ sin\ (\omega + \delta) - i$$

Digitized by Google

the opening of the exhaust-port for this particular position of the crank.

If the crank stands on the dead point, for instance in the position O R_0, then the opening for the admission of the steam is $R_0 V_0$, that for the exhaustion $R_0 W_0$; and the former value is therefore the outside, the latter the inside lead.

The correctness of the following will be understood very easily. At the position O R_3 of the crank, when it stands at the angle R_3 O R_0 *before* the dead point, the admission of the steam begins behind the piston. At the position O R_3 the exhaustion begins before the piston.

At the position O M_1 of the crank, the entrance port is just full open, and it remains fully uncovered until the position O M_2 is arrived at by the crank.

At O R_2 the expansion begins, at O R_4 the compression, &c., &c.

If the crank occupies the position O Q, the valve is at its central position, and when the crank is at the position O P, the valve is most remote from its central position and M P represents the distance to which the outer valve edge has moved back over the inner edge of the entrance port.

If it is also required to know, at which positions of the crank the other port is just fully open for the exhaustion of the steam or just begining to shut, then draw at the distance W N = a the line $N_1 N_2$ parallel to O Q, and O N_1 and O N_2 are at once the required positions.

In the other semicircle the procedure is of course the same, and all chief positions of the crank have only to be produced over O till they meet the circumference of the circle.

As the values of r, e, a, and ι are generally drawn full size, all the other measurements are also obtained to the same scale.

In the diagram, Fig. 17, which is drawn half-size, the dimensions are applied as taken in problem 2.

This diagram gives for the simple valve-gear the chief positions of the crank with as great facility as the circle-diagram; and it gives just as simply and clearly the proportions for valve-gears with separate expansion-valves. It only loses in clearness, if it is applied to those valve-gears in which the eccentricity as well as the angle of

Digitized by Google

advance are variable according to certain laws; for such valve-gears, of which we shall examine a whole series farther on, the circle diagram is to be preferred.

The Diagram by Müller.

Another way of ascertaining the different positions of the valve in relation to the different positions of the crank in a graphical manner has been given lately by Professor Müller.*

Müller's diagram, which distinguishes itself from the above-given diagrams principally by representing the travels of the valve in a mathematically exact manner, will be understood from the following description:

Let O X (Fig. 4, Plate I.) again be the direction of the valve-face, and let O Y be vertical to this direction. If the crank is on the dead point, the eccentricity r takes the position O D; D O Y being the angle of advance δ. Next let D B_2 be the eccentric-rod, the length of which we shall call l, and B_2 may represent directly the centre of the valve. If the crank is now turned through the angle ω, then the centre line of the eccentric r is shifted from the position O D into that marked O D', and the valve-centre comes to B_0. The distance O B_0 has been already (page 10) determined by calculation; but this value may also be obtained by geometrical means as follows: Instead of taking the valve-face O X as fixed, and O D as changing its position to O D_1, as is the case in reality, we take the eccentricity O D as fixed, and turn the valve-face O X in the opposite direction through the angle X O X' = ω (direction of the arrow). Marking on O X' from D the length of the eccentric-rod B D = l, reaching to B, the length O B gives at once the distance of the valve-centre from the centre of the axle for the angle ω, for O B = O B_0. Hence follows directly the simple rule:—In order to fix the distance of the valve-centre B from the centre O of the axle, describe from the point D a circle with the length of the eccentric-rod D B_2 = D B = l as a

* Invitation-paper of the Royal Polytechnical School at Stuttgart. 1859. Civilin genieur, vol. vii., p. 347.

Digitized by Google

radius; the radial lines drawn to that circle from O then represent directly the required distances; and the angle, which any radial line O B forms with the direction O X gives at the same time the angle ω, to which the crank at this position of the valve differs from the dead point.

But the valve has to swing on a fixed centre backwards and forwards. In adjusting the valve, as has been done in the previous instances with equal lead, *i. e.* ensuring that it stands at equal distances from the centre of oscillation, when the crank passes through the one or the other dead point, we must proceed in the following manner, in order to fix the movement of the valve.

Bisect the distance $B_2 B_3$, *i. e.* the distance between the points in which the circle cuts the direction O X, in the point O_1, and describe from the centre O of the axle with the radius $O M = O_1 B_2 = O_1 B_3$ a second circle, and the length M B gives directly the movement ξ of the valve, or the distance travelled by the valve from its central position for the angle ω. Producing O B past O, we get in the same manner with the length M′ B′ the movement of the valve for the angle $180 + \omega$; whilst the lengths $M_2 B_2$ and $M_3 B_3$ give the movement of the valve for $\omega = 0$ and $\omega = 180^0$, *i. e.* for the moments at which the crank passes through the one or the other dead point. It is thus also easy to understand that $O M_0$ and $O M'_0$ will represent the positions occupied by the crank when the valve is just at the centre of its travel.

In the same easy manner and with reference to that which is said on page 23, the openings of the entrance and exhaust ports may be obtained for any position of the crank. Making upon the line O B the distance $M P = M' P' = e$, *i. e.* equal to the outside lap, and the length $M N = M' N' = i$ equal to the inside lap; and describing from O with the lengths O P, O N, O P′, O N′ a series of circles, then B P gives the opening of the entrance-port, and B N the opening of the exhaust-port for the angular movement ω of the crank; and in the same manner the lengths B′ P′ and B′ N′ give the same openings for the angle $180 + \omega$.

The distances $B_2 P_2$ and $B_3 P_3$ represent the openings of the entrance-port, and $B_2 N_2$ and $B_3 N_3$ those of the exhaust-port, if the crank

Digitized by Google

stands on one or the other dead point, the piston thus being at the end of its stroke; the former distances represent therefore the outside lead, and the latter the inside lead. It will be seen finally, considering the statements made previously in constructing the diagram, that for the forward and backward stroke of the piston respectively O R_1 and O R_1' in Fig, 4, Plate I., represent the positions of the crank at the beginning of the expansion; O R_2 and O R_2' those at the beginning of the compression; O R_3 and O R_3' those at the beginning of the exhaustion; and O R_4 and O R_4' those at the beginning of the admission of the steam.

At first sight the present diagram might easily be taken to be more useful and correct than the diagrams which we have previously given, because Müller's diagram gives all measurements mathematically exact; but on a closer examination it shows disadvantages, which are difficult to remove, so that it can be recommended only for investigations of valve-gears with very *short* eccentric rods; for in order to obtain the measurements correctly, the figure must be drawn full-size. But as valve-gears in most cases have eccentric rods, which are very long in proportion to the eccentricity, the figure will not only occupy an inconveniently large space, but what speaks chiefly against the application of the diagram, the different circles will cut each other at very acute angles, so that the points of intersection which give the positions of the crank for the beginning of the expansion, the compression, &c., cannot be marked with the necessary exactness. The longer the eccentric rods are, or the better therefore that valve-gear is, the more uncertain will be the results obtained from the diagram. But it shows still greater disadvantages if, as must be almost always the case, the diagram is drawn to a reduced scale. Finally, for those gears in which the eccentricity and the angle of advance are variable, and of which several will be examined farther on, it loses any utility.

But the diagram may be applied with great advantage to an investigation of another kind, *viz.* to ascertain the position of the piston in the cylinder for a corresponding position of the crank.

We have always supposed in our former examinations (p. 25) the length of the connecting-rod to be infinitely great in proportion to

Digitized by Google

the crank-radius. This supposition leads in many cases to considerable differences, and the following construction, which gives the positions of the crank most correctly, is therefore to be preferred.

Let A B (Fig. 18) be the fixed steam-cylinder, O the axis of the crank-shaft, O R the crank in any position, and R K the connecting rod of the length L, with its end K directly fastened to the piston. If the crank stands in one or the other dead point, or in the position O R_0 or O R'_0, the piston will be on the end of its stroke K_0 or K'_0. If the crank O R, of the radius R, has turned through the angle R_0 O R = ω, the corresponding position K of the piston is found by intersecting the line O A with an arc drawn from the point R, with the length L of the connecting rod as a radius. K_0 K and K K'_0 are then the distances of the piston from the ends of its stroke for the corresponding position O R of the crank; and K_0 K is the distance travelled by the piston. Instead now of supposing the crank to be movable and the cylinder fixed, we take the crank as fixed in O R_0 and turn the centre line of the cylinder O A through the angle ω, into the position O M_0. If we now, with the length of the connecting rod L as a radius mark off from R_0 upon the line O M_0 the point M, we shall have, as will easily be seen, M_0 M = K_0 K and M′ M = K'_0 K, if O M_0 is made = O K_0 and O M′ = O K'_0. The following rule for determining the movement of the piston is thus obtained. Describe from the centre O of the crank-shaft with the radii O K_0 and O K'_0 the two circles I and II.

Fig. 18.

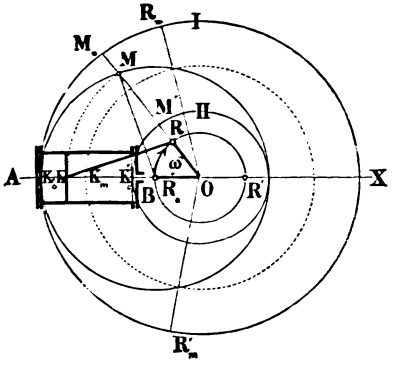

Next describe from R_0 with the lengths R_0 K_0 = R_0 M = L a third circle, which we may call according to Müller the distance-circle. For any position O R of the crank, after producing the line O R beyond the three circles, three points of intersection M_0 M and M′ are obtained, and the distances M_0 M and M M′ give at once with mathematical correctness the distances of the piston from the end points of its

Digitized by Google

stroke, when the crank has travelled from the dead-point through the angle ω. Bisecting the stroke $K_0 K'_0$ of the piston in K_m and describing from O the fourth circle (shown in the figure in dotted lines), the lines O R_m and O R'_m, which pass through the points of intersection of this circle with the distance-circle, give the two positions of the crank, at which the piston is just passing through the middle of its stroke. The angles, through which the crank has to pass from its dead-points, till the piston arrives at the middle of its stroke, are therefore different for the backward and forward stroke; and they approach nearer to right angles, the longer the connecting rod L is in proportion to the radius R of the crank.

Digitized by Google

SECOND DIVISION.

REVERSING-MOTIONS WITH VARIABLE EXPANSION.

(*Link-motions.*)

VALVE-GEARS by which the slide-valve can be moved so that the crank-axle runs either in the one or in the other direction, or as is generally said, the engine works forwards or backwards, are called briefly "*reversing-motions.*"

These reversing-motions, which must be applied to all locomotive, marine, and winding engines, are constructed in very different manners: by far the most important ones being those which allow at the same time of variable expansion, by which the admission of the steam to the cylinders can be interrupted sooner or later as well during the forward as during the backward motion of the engine.

In all these motions, which by corresponding movements of one slide-valve allow of alterations in the degree of expansion, and the most important of which we will examine and demonstrate hereafter, the motion of the slide-valve is derived from a frame called the "*link,*" which itself is set into an oscillating, and at the same time a forward and backward motion by one or two eccentrics. Reversing-motions with variable expansion of this kind will be called for the future briefly "*link-motions.*"

The link-motions belong unquestionably to the most ingenious mechanical movements, which occur altogether in the construction of machinery. Through simply shifting a lever and some of the parts of this very simple mechanism, the movement of the slide-valve, produced thereby, can be altered so that the engine can be made to run backwards or forwards with any degree of expansion, a result which it might be expected could only be obtainable through very complicated mechanisms. But the link-motions now usually employed

Digitized by Google

are as simple as the law, carefully considered, according to which the movement of the slide-valve takes place is complete. The object of this book is chiefly to demonstrate this law for the most important and best-known link-motions, and to derive from it practical and useful rules.

CHAPTER I.

Link-motion by Stephenson.

THIS link-motion is the one most generally used for locomotive engines. Fig. 5, Plate II., shows the ordinary arrangement employed.

Upon the axle O are fixed the two eccentrics D and D_1, from which extend the two eccentric rods B C and $B_1 C_1$, these being jointed at their farther ends to the expansion-link C C_1. In a curved slot, cut into this expansion-link, there slides the block M, which is connected by a joint with the valve-rod T, which moves in fixed guides. The radius for the curve of the slot in the link must be, as will be shown hereafter, equal to the length of the eccentric rod. The expansion-link, which we in future shall simply call "link," is suspended by the lifting-link E C_1 in such a manner, that if the engine-driver moves the reversing-lever L M, the reversing-rod G F and the lifting-arm F K E will lower or raise the lifting-link E C_1, and therefore also the link C C_1. The block M then slides in the slot of the link, and the driver may therefore use, according to the position of the lever L M, any point of the link for the movement of valve-spindle T. The lever L M moves in an arc Q R, which is provided with notches, by means of which the lever can be fixed at any position. The suspension of the link, which is made in the two shapes represented by Figs. 6 and 7, Plate II., is also often effected at the upper end C or by a pin in the middle I of the link, this point being called the dead-point of the link. For if the link is (Fig. 5, Plate II.) so far raised that the point I drives the block M, and therefore the slide-valve, the distribution of the steam is then such, that no movement of the engine can take place; but if the driver lowers the link, the engine runs forward, because the forward eccentric D then decides

Digitized by Google

principally the movement of the slide-valve. If, on the contrary, the link is raised so far that a point below the dead point drives the block M, the engine runs backwards; the backward eccentric then influencing chiefly the movement of the slide-valve. It will now be seen that the link, in consequence of the turning of the axle, will not only receive an oscillating motion, but will also at the same time move backwards and forwards, and transfer in this way a peculiar movement to the block M and also to the slide-valve. The latter movement is, however, so extraordinarily complicated, that it cannot be defined exactly, but only approximately, by mathematical calculation. But the results of the calculation and of the diagram coincide completely with practice.

In examining these link-motions, we have to distinguish different cases: the eccentric rods are either *open* or *crossed*, as is represented by *Fig. 19a* and *19b*; and in either case the angular advance of the two eccentrics may be *equal* or *unequal*.

Fig. 19.

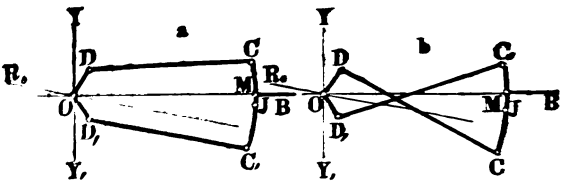

Let O be the centre of the axle, O D the centre line of the forward, and O D_1 that of the backward eccentric; then any point M of the link may drive the valve-spindle M B, and the centre line of the motion of the latter passes through O. If, now, the crank is on one of its dead points (notwithstanding the angle which it forms with the centre lines of the eccentrics)—for instance in the direction O R_0, and if the centre lines of the eccentrics are in this position equally inclined towards the vertical line O Y, then we have *equal* angles of advance; these being $D\,O\,Y = D_1\,O\,Y_1 = \delta$. If these inclinations are not equal at this position of the crank, we have then to deal with different angles of advance, and the distribution of the steam is then a different one. In order to examine whether a link-motion works with crossed or open rods, the axle is turned so far *that the centre*

Digitized by Google

lines of the two eccentrics are between the vertical line Y Y_1 and the link. If then the eccentric rods occupy the positions shown in Fig. 19*a*, we have to do with open rods, or with crossed rods, if they are as shown in Fig. 19*b*. The distribution of the steam is again different in the two cases.

For the further investigation we will introduce the following definition:—The amount of the eccentricities O D = O D_1 = r; the angular advances (both taken as equal) D O Y = D_1 O Y_1 = δ; the length of the eccentric rods D C = D_1 C_1 = l. (If the link is as in Fig. 6, Plate II., the length is to be measured to K.) The half-length of the link, measured from the dead point I to the connecting points of the rods C and C_1 = c. (In the link, Fig. 6, Plate II., K I is to be put equal K_1 I = c.) The distance of the slide-block M from the middle of link I, which is variable according to the position of the link, and which may be positive or negative, = u. Finally, let the length M B of the valve-spindles measured from the centre B of the slide-valve = l_1.

Theory of Stephenson's Link-motion.

a. The Determination of the Travel of the Slide-valve.

The chief object of the theoretical investigation is to find the relation between the angular movement ω of the axle or of the crank, measured from the dead point, and the travel of the valve ξ, *i. e.* its distance from its centre of motion at any position of the link, or any value of u. We shall first carry out the investigation for a link-motion with open rods and equal angles of advance, and from the results obtained it is easy to determine the relations for crossed rods and unequal angles of advance.

First of all, we have to calculate for certain corresponding values of ω and u, the inclination α of the chord of the link towards a line vertical to the centre line O X (Fig. 20).

Digitized by Google

Fig 20.

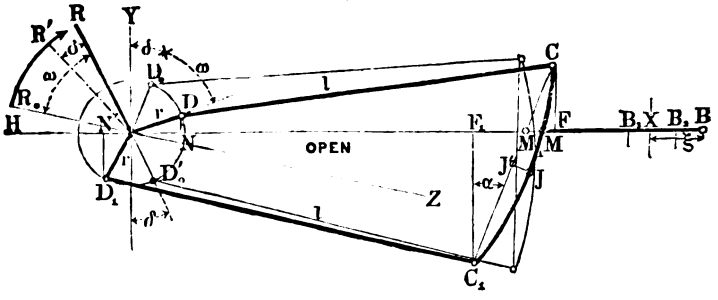

For this purpose we put approximately the length of the chord of the link C C_1, equal to the length of the arc, therefore $= 2c$, which is allowable, as the radius for the curve of the link is always very large. In the same way we put the distance of the point M_1 in the chord from the centre of the chord I_1, equal to u, *i. e.* $=$ I M. If the crank is on the dead point, for instance, in the direction O R_0, if O Z represents the direction of the centre line of the steam cylinder, the different parts of the motion take a position as shown in Fig. 20 by the thin lines.

If the crank is now turned through an angle ω, the eccentric, the eccentric rods, and the link will take the position shown by the thick lines. The connecting point M of the valve rod will not leave the line O B if the lifting link is taken sufficiently long, because the latter, at the supposed position and during the turning of the axle, will keep the link always at a constant height, at least approximately.

Let us now drop upon O B from the points C and C_1, the perpendiculars C F and $C_1 F_1$, and also upon O B, from the points D and D_1, the perpendiculars D N and $D_1 N_1$, and fix at first the angle F C C_1 $=$ F_1 C_1 C $= \alpha$.

Then:

$$\sin \alpha = \frac{F F_1}{C C_1} = \frac{O F - O F_1}{2 c}.$$

We now fix the value:

$$O F = O N + N F = O N + \sqrt{D C^2 - (C F - D N)^2}$$
$$= r \sin (\delta + \omega) + \sqrt{l^2 - [(c - u) \cos \alpha - r \cos (\delta + \omega)]^2},$$

or approximately, if for the small angle α is put cos $\alpha = 1$, and the

Digitized by Google

factors with l in a higher power in the denominator are neglected in the evolution of the progression:

$$O F = r \sin(\delta + \omega) + l - \frac{c^2}{2l} + \frac{c u}{l} - \frac{u^2}{2l} + \frac{(c - u) r \cos(\delta + \omega)}{l} - \frac{r^2 \cos^2(\delta + \omega)}{2l} \quad (10)$$

and next in the same manner:

$$O F_1 = N_1 F_1 - O N_1 = \sqrt{D_1 C_1^2 - (C_1 F_1 - D_1 N_1)^2} - O N_1,$$

or substituting the known signification:

$$O F_1 = r \sin(\delta - \omega) + \sqrt{l^2 - [(c + u) \cos \alpha - r \cos(\delta - \omega)]^2},$$

which gives approximately

$$O F_1 = r \sin(\delta - \omega) + l - \frac{c^2}{2l} - \frac{c u}{l} - \frac{u^2}{2l} + \frac{(c + u) r \cos(\delta - \omega)}{l} - \frac{r^2 \cos^2(\delta - \omega)}{2l}.$$

If the two values of O F and O F_1 are substituted in the equation $\sin \alpha = \frac{O F - O F_1}{2c}$, we get, after sufficient reduction:

$$\sin \alpha = \frac{r}{c} \cos \delta \sin \omega - \frac{r}{l} \sin \delta \sin \omega - \frac{u r}{c l} \cos \delta \cos \omega + \frac{u}{l} + \frac{r^2}{4 c l} [\cos^2(\delta - \omega) - \cos^2(\delta + \omega)]. \quad (11)$$

By this formula the inclination α of the link to the vertical line $C_1 F_1$ may be calculated for any value of ω and u.

In future we shall be obliged to calculate this inclination α under the supposition that the dead point of the link falls on the line O X; then therefore $u = 0$, and for this case equation (11) gives at once:

$$\sin \alpha = \frac{r}{c} \cos \delta \sin \omega - \frac{r}{l} \sin \delta \sin \omega + \frac{r^2}{4 c l} [\cos^2(\delta - \omega) - \cos^2(\delta + \omega)]. \quad (12)$$

After these preparations, it will be found easy to calculate the distance of the valve-centre B from the centre O of the axle. According to the figure:

$$O B = O M_1 + M_1 M + M B = O F - M_1 F + M M_1 + M B.$$

Digitized by Google

The value of O F is known according to equation (10); next $M_1 F = (c - u) \sin \alpha$; $M B = l_1$ and $M M_1 = \frac{c^2}{2\rho} - \frac{u^2}{2\rho}$, if we suppose that the link is curved to any radius ρ. We get thus

$$O B = O F - (c - u) \sin \alpha + \frac{c^2}{2\rho} - \frac{u^2}{2\rho} + l_1.$$

Substituting in this equation the values of O F and $\sin \alpha$ above obtained, according to equation (11), then follows after sufficient reduction:

$$\begin{aligned} O B = {} & r \left(\sin \delta + \frac{c^2 - u^2}{c\,l} \cos \delta \right) \cos \omega + \frac{u\,r}{c} \cos \delta \sin \omega \\ & + l + l_1 + (c^2 - u^2) \frac{l - \rho}{2\,l\,\rho} \\ & - \frac{r^2}{4\,c\,l} [(c + u) \cos^2 (\delta + \omega) + (c - u) \cos^2 (\delta - \omega)]. \end{aligned} \qquad (13)$$

If the link-motion is a correct one, the valve must for any value of u (*i. e.* at all positions of the reversing lever) symmetrically swing backwards and forwards on both sides of a certain point X, the position of which is next to be ascertained.

We start also this time with the supposition, that the valve will be adjusted by the designer to give equal lead, in the manner explained on page 11 for the simple valve-motion.

At first we will suppose the crank be on one of its dead points, and thus $\omega = 0$, and the distance of the valve centre of the axle will be, according to equation (13),

$$\begin{aligned} O B_2 = {} & r \left(\sin \delta + \frac{c^2 - u^2}{c\,l} \cos \delta \right) \\ & + l + l_1 + (c^2 - u^2) \frac{l - \rho}{2\,l\,\rho} - \frac{r^2}{2\,l} \cos^2 \delta. \end{aligned}$$

If the crank stands on the second dead point, then $\omega = 180°$, and the same equation (13) gives

$$\begin{aligned} O B_3 = {} & - r \left(\sin \delta + \frac{c^2 - u^2}{c\,l} \cos \delta \right) \\ & + l + l_1 + (c^2 - u^2) \frac{l - \rho}{2\,l\,\rho} - \frac{r^2}{2\,l} \cos^2 \delta. \end{aligned}$$

Digitized by Google

But the centre of oscillation X must be midway between B_2 and B_3, and its distance from the centre of the axle is thus

$$O X = \frac{O B_2 + O B_3}{2},$$

or substituting the values above given

$$O X = l + l_1 - \frac{r^2}{2 l} \cos^2 \delta + (c^2 - u^2) \frac{l - \varrho}{2 l \varrho}. \qquad (14)$$

In this equation u still appears, *i. e.* the oscillating centre X is not fixed, but alters its position with the movement of the link; and this is not admissible. If the link-motion, therefore, is to fulfil all conditions, the last quantity must be *nil*, which is the case if

$$\varrho = l.$$

Hence there follows the important rule:—*In Stephenson's valve-gear the link must always be curved to an arc, the radius ϱ of which is equal to the length l of the eccentric rods.*

Under this supposition, the distance of the oscillating centre from the centre of the axle is, according to equation (14),

$$O X = l + l_1 - \frac{r^2}{2 l} \cos^2 \delta, \qquad (15)$$

i. e. exactly as great as in the simple valve-motion (page 11).

Further, the distance of the valve-centre B from the centre of the axle for the angle ω is, according to equation (13),

$$O B = r \left(\sin \delta + \frac{c^2 - u^2}{c l} \cos \delta \right) \cos \omega + \frac{u r}{c} \cos \delta \sin \omega + l + l_1$$
$$- \frac{r^2}{4 c l} [(c + u) \cos^2 (\delta + \omega) + (c - u) \cos^2 (\delta - \omega)]; \qquad (16)$$

and finally the travel ξ of the valve from its central position:

$$\xi = O B - O X,$$

or substituting the above values and after sufficient reduction:

$$(II^a) \quad \xi = r \left(\sin \delta + \frac{c^2 - u^2}{c l} \cos \delta \right) \cos \omega + \frac{u r}{c} \cos \delta \sin \omega$$
$$+ \frac{r^2}{2 l} \left(\cos 2 \delta \sin \omega + \frac{u}{c} \sin 2 \delta \cos \omega \right) \sin \omega.$$

Digitized by Google

Or calling:

$$r\left(\sin\delta + \frac{c^2 - u^2}{c\,l}\cos\delta\right) = A, \qquad (17)$$

$$\frac{u\,r}{c}\cos\delta = B, \qquad (18)$$

$$\frac{r^2}{2\,l}\left(\cos 2\,\delta \sin\omega + \frac{u}{c}\sin 2\,\delta\cos\omega\right)\sin\omega = F, \qquad (19)$$

we get:

$$(II^b) \qquad \xi = A\cos\omega + B\sin\omega + F.$$

An equation of exactly the same form as that found for the simple valve-motion, only that the factors A, B, and F represent different values.

The value of F according to equation (19) is again the "missing quantity," and ought to be also here exceedingly small, if the oscillating centre shall not be variable during the turning of the crank. As in well-constructed link-motions l is always large in proportion to r, the quantity has no great influence, and we may put therefore:

$$(II^c) \qquad \xi = r\left(\sin\delta + \frac{c^2 - u^2}{c\,l}\cos\delta\right)\cos\omega + \frac{u\,r}{c}\cos\delta\sin\omega.$$

From the formulæ above given, we can obtain at once without further calculations the formulæ for the travel of the valve in the case of Stephenson's link-motion with crossed eccentric rods (Fig. 21);

Fig. 21.

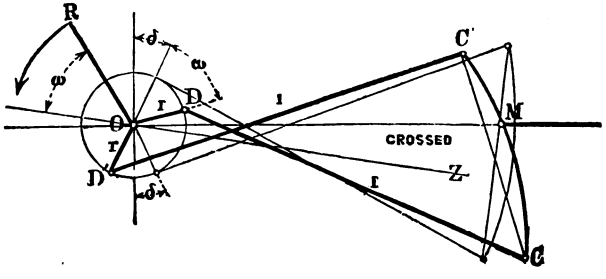

as for reasons, easily to be understood, we have only to take in all

Digitized by Google

formulas the value of c as negative. Thus we get next for the travel of the valve with crossed eccentric rods

$$(II^d) \quad \xi = r\left(\sin\delta - \frac{c^2-u^2}{c\,l}\cos\delta\right)\cos\omega - \frac{u\,r}{c}\cos\delta\sin\omega + \frac{r^2}{2\,l}\left(\cos 2\,\delta\sin\omega - \frac{u}{c}\sin 2\,\delta\cos\omega\right)\sin\omega.$$

Or neglecting also here the "missing quantity" and combining the equations of the two kinds of link-motions:

$$(II) \quad \xi = r\left(\sin\delta \pm \frac{c^2-u^2}{c\,l}\cos\delta\right)\cos\omega \pm \frac{u\,r}{c}\cos\delta\sin\omega,$$

wherein the upper sign must be taken for open, and the lower one for crossed rods.

b. On the Curve of Centres.

The equation, obtained for the travel of the valve, has again, as stated, the form:

$$\xi = A\cos\omega \pm B\sin\omega$$

and the travels of the valve may therefore be taken, as already shown on pages 13 and 21, as chords of a circle, the centre of which has the co-ordinates (Fig. 2, Plate I.):

$$O\,B = a = \frac{A}{2} = \frac{r}{2}\left(\sin\delta \pm \frac{c^2-u^2}{c\,l}\cos\delta\right) \text{ and}$$

$$B\,C = b = \frac{B}{2} = \frac{r\,u}{2\,c}\cos\delta.$$

But the above values of a and b are dependent upon u, *i.e.* upon the position of the link, and therefore there is a special valve-circle corresponding to each position of the link. The centres of all these circles will be in a certain curve, and this curve we shall call the curve of centres. In Figs. 8 and 10, Plate II., the different centres are marked C_0, C_1, C_2, &c., &c., the first figure being for open, and the second for crossed rods; and it will be seen that in the first case the concave side, and in the second case the convex side of the curve is turned towards the point O.

Digitized by Google

The co-ordinates for any point C_3 of the curve of centres, measured from O and first for open rods, are (Fig. 8, Plate II.):

$$O\,B_3 = \frac{r}{2}\left(\sin\delta + \frac{c^2 - u^2}{c\,l}\cos\delta\right),$$

$$B_3\,C_3 = \frac{u\,r}{2\,c}\cos\delta.$$

Making the abscissa measured from the point $C_0 = x$, substituting thus for

$$x = O\,C_0 - O\,B_3,$$

we get (because for C_0 we have $u = 0$)

$$O\,C_0 = \frac{r}{2}\left(\sin\delta + \frac{c}{l}\cos\delta\right) \quad \text{and therefore}$$

$$x = \frac{r\,u^2}{2\,c\,l}\cos\delta.$$

Calling also the ordinate $B_3\,C_3 = y$, we may find from $y = \frac{ur}{2c}\cos\delta$ the value for u, and substitute it in the equation for x; thus follows:

$$y^2 = \frac{l\,r\cos\delta}{2\,c}.\,x. \tag{20}$$

The curve of centres is, therefore, here a parabola, the parameter of which is $= \frac{lr\cos\delta}{2c}$, and in which the distance between its vertex C_0 and the centre O is:

$$O\,C_0 = \frac{r}{2}\left(\sin\delta + \frac{c}{l}\cos\delta\right).$$

Exactly the same equation is obtained in a similar manner for crossed rods; but the distance between the vertex and the centre O is:

$$\frac{r}{2}\left(\sin\delta - \frac{c}{l}\cos\delta\right);$$

and the convex side of the curve is turned towards O (Fig. 10, Plate II.).

c. On the Suspension of the Link.

For getting out the elementary formula for the movement of the valve, we supposed that the point M of the link, from which the

Digitized by Google

valve rod receives its motion, moved backwards and forwards exactly in a straight line O B (Fig. 22).

In reality this is not the case; the link always moves a little up and down during the turning of the axle, because one of its points is fastened to a lifting link which moves round a fixed point E. The point of suspension J, therefore, moves backwards and forwards in an arc, and as in consequence the sliding-block also moves a little backwards and forwards in the link, this irregularity will finally be transferred to the valve.

Fig. 22.

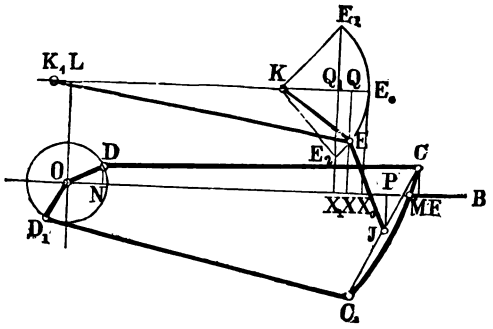

As these irregularities may be made very great by an incorrect mode of suspension, it is one of the most important questions of the theoretical investigation to determine the manner in which the suspension should be carried out, in order that its influence upon the movement of the valve may be as small as possible.

Two different systems of suspending the link are generally found to occur in practice; the lifting-link being either fastened to the lower end of the link, thus to C_1, or to its centre. The upper point E of the lifting-link always moves in an arc, the centre of which K is fixed. It is now the problem to ascertain the different positions of the end point E of the lifting-link for different positions of the link, under the supposition that the link may move up and down as little as possible; and the latter will be the case if, under all circumstances, the point of connection of the link with the lifting-link moves backwards and forwards in an arc, the chord of which is parallel to the centre line O B of the stroke.

We shall suppose at first in our investigations that the link is suspended by its centre.

Let us take the point of suspension J as being in the centre of the chord C C_1, which corresponds best with the mode of suspension prac-

Digitized by Google

tically followed, and endeavour to ascertain the horizontal motion of the suspending point J, under the supposition that any point M of the link moves backwards and forwards in the direction of the stroke O B, and at a distance u from the dead point. Let O be the point at which the co-ordinates commence, and we have then to find the abscissa O P of the point J.

It is

$$O P = O F - F P, \tag{21}$$

but according to equation (10) we have:

$$O F = r \sin(\delta + \omega) + l - \frac{c^2}{2l} + \frac{c u}{l} - \frac{u^2}{2l} + \frac{r(c-u)\cos(\delta+\omega)}{l}, \tag{22}$$

if we neglect the small quantity

$$\frac{r^2 \cos^2(\delta+\omega)}{2l};$$

and next we have according to Fig. 22,

$$F P = c \sin \alpha$$

if α is the angle of inclination of the link-chord with a vertical line. But, according to equation (11), page 61, the value of $\sin \alpha$ is known; and neglecting also there the quantity which contains $\frac{r^2}{4cl}$ as a factor, we get:

$$\sin \alpha = \frac{r}{c} \cos \delta \sin \omega - \frac{r}{l} \sin \delta \sin \omega - \frac{u r}{c l} \cos \delta \cos \omega + \frac{u}{l} \tag{23}$$

therefore

$$F P = c \sin \alpha = r \left(\cos \delta - \frac{r}{l} \sin \delta \right) \sin \omega - \frac{u r}{l} \cos \delta \cos \omega + \frac{c u}{l}.$$

Applying to equation (21) this value and the one obtained for O F from equation (22), we get after a few reductions:

$$O P = l - \frac{c^2 + u^2}{2l} + r \left(\sin \delta + \frac{c}{l} \cos \delta \right) \cos \omega + \frac{r u}{l} \sin \delta \sin \omega. \tag{24}$$

The abscissa O P of the point of suspension J may be calculated by this equation for any position of the link, and thus for any value of u, and for any angular movement ω.

Digitized by Google

For $\omega = o$ follows the abscissa:

$$l = \frac{c^2 + u^2}{2\,l} + r\left(\sin\delta + \frac{c}{l}\cos\delta\right).$$

For $\omega = 180°$, however, the abscissa is

$$l = \frac{c^2 - u^2}{2\,l} - r\left(\sin\delta + \frac{c}{l}\cos\delta\right).$$

The arithmetical mean of the two values gives the abscissa O X $= x$, which corresponds to the central position of the point J, and follows:

$$x = l - \frac{c^2 + u^2}{2\,l}. \qquad (25)$$

But this simple equation gives at the same time the *abscissa of the upper suspending point* E *for the corresponding position of the link.*

The ordinate X E $= y$ of the suspending point E is next, if the length of the lifting-link J E is called l_2:

$$\text{X E} = \text{I E} - \text{I P} \quad \text{or}$$
$$y = l_2 - u\cos\alpha.$$

But the angle α is so small with correct proportions of the different parts of the gear, that we may take without any consideration $\cos\alpha = 1$, thus approximately

$$y = l_2 - u. \qquad (26)$$

The two equations (25) and (26) give thus for any value of u the correct position of the suspending point E, or the curve in which this point has to be moved, if the disadvantageous oscillations of the link for *all* its positions have to be reduced to a minimum.

If the link is raised so much, that its dead point gives the movement to the valve, then $u = 0$, and we get for the co-ordinates of the suspending point E_0 in this position (Fig. 22):

$$\text{O X}_0 = x_0 = l - \frac{c^2}{2\,l} \quad \text{and} \quad \text{X}_0\,\text{E}_0 = y_0 = l_2. \qquad (27)$$

But now l is the length of the eccentric rod and $\frac{c^2}{2\,l}$ is the height

Digitized by Google

of the arc of the link; the difference thus gives at once the abscissa of the suspending point E_0, corresponding to the dead point, and the length l_2 of the lifting-link is simply its ordinate: the point E_0 is thus found by construction with the greatest facility.

Drawing also through E_0 the line $E_0 K$ parallel to the centre line O B of the motion; taking E_0 as the point at which the co-ordinates for the curve $E E_0 E_1$ commence, and putting the abscissa $E_0 Q = v$, the ordinate $Q E = z$, so we have $E_0 Q = O X_0 - O X$, or using equations (25) and (27)

$$v = \frac{u^2}{2 l}.$$

And as also

$$Q E = z = Q X - E X = l_2 - y \quad \text{or}$$
$$z = u,$$

there follows the required equation of the curve $E E_0 E_1$

$$z^2 = 2 l v, \tag{28}$$

i. e. the curve in which the suspending point E has to be moved, if the influence of the vertical oscillations of the link upon the movement of the valve is to be reduced to a minimum, is a parabola, of which the parameter $= 2l$, or equal to double the length of the eccentric rod. The vertex of the parabola is at the point E_0, the suspending point, which corresponds to the dead point of the link; and the axis runs parallel to the centre line O B of the stroke.

The positions of the two suspending points E_1 and E_2, which correspond with the highest and lowest positions of the link, are found by substituting for u in equation (25) the greatest values, which we will signify by $+ c_1$ and $- c_1$, whence according to Fig. 6, Plate II. $J K = c_1$. (In the link Fig. 7, Plate II., u may even become equal to c.)

We thus get the abscissa belonging to both points

$$O X_1 = l - \frac{c^2 + c_1^2}{2 l},$$

or if we measure the abscissa upon the axis of the parabola from E_0:

$$E_0 Q_1 = O X_0 - O X_1 = \frac{c_1^2}{2 l}.$$

Digitized by Google

The ordinates $Q_1 E_1$ and $Q_1 E_2$ are $= c_1$ and $- c_1$.

As $\frac{c_1^2}{2l}$ is always a small quantity, and the parameter $2l$ of the parabola $E_1 E_0 E_2$ is always very great, the arc of the parabola may be replaced by an arc of a circle of the radius l, for the radius of the vertex of a parabola is equal to the half parameter.

We obtain thus the peculiar result: that the suspending point E *is to be moved in an arc of a circle, the radius of which is equal to the length of the eccentric rod,* and the centre of which is at the same height above the centre line O B, as the point E_0.

In order therefore to obtain the *true* position K_1 for the centre of motion of the arm K E, we have to draw above O at the distance $O L = E J = l_2$ the line $K_1 E_0$ parallel to O B, to make $K_1 L = \frac{c^2}{2l}$ and to describe with the radius $K_1 E = l$ the arc $E_2 E_0 E_1$; *this* arc will then be the true curve, in which the point of suspension E of the lifting-link E J ought to move.

Before we compare the above result with those obtained in practice, we will examine the second usual way of suspending the link, that is, of connecting the link to the lifting-link *by the lower end* C_1 (Fig. 23).

We start here with the same supposition, as in the former case by examining here also the horizontal movement of the point C_1 for any position of the link, and thus setting up a general formula for its abscissa O P.

Fig. 23.

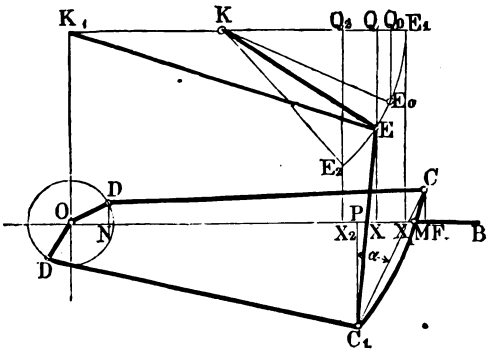

According to Fig. 23 this is:

$$O P = O F - F P.$$

O F is known according from equation (22) and F P is, as will be seen from the Figure:

$$F P = 2 c \sin \alpha,$$

Digitized by Google

or using the value of $\sin \alpha$ obtained from equation (23),

$$F P = 2 r \left(\cos \delta - \frac{c}{l} \sin \delta \right) \sin \omega - 2 \frac{u r}{l} \cos \delta \cos \omega + 2 \frac{c u}{l}.$$

Thus follows after substitution and sufficient reduction:

$$O P = l - \frac{(c+u)^2}{2 l} + r \left[\sin (\delta - \omega) + \frac{c+u}{l} \cos (\delta - \omega) \right]. \quad (29)$$

The abscissa O P of the lower end C_1 of the link may therefore be calculated through this equation for any position of the link, *i. e.* for any value of u and for any angular movement ω.

For $\omega = 0$ the value of the abscissa is

$$l - \frac{(c+u)^2}{2 l} + r \left[\sin \delta + \frac{c+u}{l} \cos \delta \right].$$

For $\omega = 180^0$ the abscissa is:

$$l - \frac{(c+u)^2}{2 l} - r \left[\sin \delta + \frac{c+u}{l} \cos \delta \right].$$

The arithmetical mean of these two quantities gives the abscissa $O X = x$, which corresponds with the *central position* of the point C_1; this is:

$$O X = x = l - \frac{(c+u)^2}{2 l}. \quad (30)$$

But this is at the same time the *abscissa of the upper suspending point* E, for the lifting-link $E C_1$ has to hang vertically, if C_1 passes through its centre of oscillation. The corresponding ordinate y is then

$$X E = y = E C_1 - C_1 P \text{ or}$$
$$y = l_2 - (c+u) \cos \alpha.$$

But as α nearly always represents a very small value, we may again put approximately $\cos \alpha = 1$ and get then:

$$y = l_2 - (c+u). \quad (31)$$

The combination of the two equations (30) and (31) gives at once by eliminating $(c+u)$ the equation of the curve $E E_0 E_1$, through which the suspending point is to be moved, when this method of suspending the link is adopted. We get:

$$(l_2 - y)^2 = 2 l (l - x). \quad (32)$$

Digitized by Google

and this again *is the equation of a parabola,* the parameter of which is also $2\,l$, but the vertex of which measured from O has $O\,X_1 = l$ as abscissa and l_2 as ordinate. It is therefore again very easy to find it by construction.

If the link can be raised so high, that the point C_1 coincides with the centre line of the motion, then $u = -c$, and the equations (30) and (31) then give the co-ordinates of the suspending point E_1

$$O\,X_1 = l \text{ and } X_1\,E_1 = l_2,$$

i.e. the co-ordinates of the vertex of the parabola. The *highest* position E_1 of the suspending point corresponds therefore in this second method of suspending the link with the vertex of the parabola, and the curve in which the suspending point E has to move forms only *one* branch of the parabola, while in the first method of suspending the link the point E has to be moved through both branches.

Measuring also here the co-ordinates of the point E from the vertex E_1, and calling the abscissa $E_1\,Q = v$, the ordinate $Q\,E = z$, the equation (32) may be written in the following manner:

$$z^2 = 2\,l\,v, \tag{33}$$

for v is equal to $l - x$, and z equal to $l_2 - y$.

Taking also here c_1 and $-c_1$ as the greatest values of u, we get the co-ordinates of the suspending point measured from E_1:

for the *highest* position of the link: $v_2 = \dfrac{(c - c_1)^2}{2\,l}$; $z_2 = c - c_1$

for the dead point: $v_0 = \dfrac{c^2}{2\,l}$; $z_0 = c$,

for the *lowest* position of the link: $v_1 = \dfrac{(c + c_1)^2}{2\,l}$; $z_1 = c + c_1$.

The total horizontal motion of the suspending point E is thus equal to $v_1 - v_2 = \dfrac{2\,c\,c_1}{l}$, if the link is moved from the highest to the lowest position.

We may also here substitute for the arc of the parabola $E_1\,E$ an arc of a circle, *the radius of which is equal to the half parameter or equal to the length of the eccentric rod,* but the centre of which K_1 lies at the same height above the centre line of the motion as that position

Digitized by Google

of the suspending point E_1, which corresponds with the highest, and not with the central position of the link. The true centre K_1 lies in this case exactly above the centre O of the axle (Fig. 23).

Comparing the result of the above-given theoretical investigation, *viz.* that the upper suspending point of the lifting arm has to be moved always in a circular arc, the radius of which is equal to the length of the eccentric rod, with the proportions adopted in practice, we find that this radius is generally much smaller (K E in Fig. 5, Plate II.). It is therefore easy to explain that in some locomotive link-motions the link *in certain positions* moves up and down in such manner, that for these no regular movement of the valve and distribution of the steam is to be expected. The above rule could be applied practically in many cases by moving the suspending point E either in a corresponding guide, or by really suspending the link from the end of a lever of the length *l*, this lever being raised or lowered by the bell-crank lever E K F; but in most cases circumstances prevent the radius of the arc from being made so long as the eccentric rod. In practice, therefore, there is nothing else to be done, but to shift the points E_1, E_0, and E_2 parallel to the direction O B of the stroke, so far that the radius of the circle which passes through these points has the required length; but it is always desirable to fix previously the right position of these points, and to make the lifting arm K E of the bell-crank lever E K F (Fig. 5, Plate II.) as long as the circumstances will possibly allow.

In some engines we find the bell-crank lever below the link; to this case the above investigations are also applicable.

Von Landsee has lately designed a new and ingenious mode of suspending the link, applied first by Beugniot to his new goods locomotive.* We are the more ready to accept the permission of the inventor to publish the new construction in this book, as the close examinations of a model prove that by von Landsee's mode of suspension the vertical motion of the link and the disadvantageous influence of this motion upon the distribution of the steam are really reduced to a minimum, and because in these trials there will also be found a

* Mémoire sur une locomotive de montagne. Système E. Beugniot. Construite par MM. A. Köchlin et Co. à Mülhouse.—*Bulletin de la société industrielle de Mülhouse.*

Digitized by Google

proof of the correctness of the suppositions, upon which we based the above-given theory of the suspension of Stephenson's link.

Von Landsee suspends his link in the middle at its dead point. Let us suppose for this arrangement, that the vertical motions of the link are as insignificant as possible—that the suspension is effected by a lifting-link E J (Fig. 22, page 67) as long as possible, and the fulcrum of which E is so placed, that the centre of the link swings backwards and forwards in an arc, of which the chord is parallel to the valve face. In consequence of this statement, it must appear as most advantageous, if the extreme case is taken, and if the lifting link is considered as infinitely long, *i.e.* if the centre point, the point of suspension of the link, at each of the different positions of the link moves backwards and forwards in a *straight line*, which remains parallel to the valve face. This really takes place in von Landsee's arrangement, as is shown in Fig. 24.

Fig. 24.

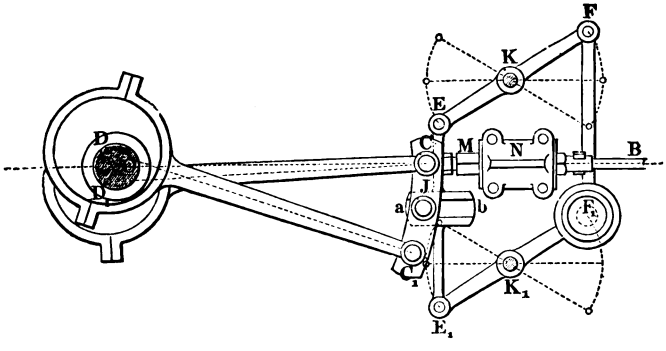

The parallelogram E F F_1 E_1 is movable round the points K and K_1; the vertical links E E_1 and F F_1 move on the turning of the horizontal arms E F and E_1 F_1 in a direction parallel to each other, and the guide *a b*, which is fastened to the vertical link E E_1 and is provided with a slot parallel to the centre-line O B, will thus always occupy positions at which this parallelism remains unaltered. In the slot of the piece *a b* the centre-pin J of the link moves backwards and forwards. The parallelogram, which is provided at F_1 with a counterweight, can be moved from the footplate on which the driver stands,

Digitized by Google

in the same manner as shown in Fig. 5, Plate II.; the shafts marked with K are in both figures identical. M B (Fig. 24) represents the valve-rod and N its guide, the link appears as lowered, and as open eccentric rods are supposed, the engine, when the different parts are arranged as shown in the Figure, will run forwards.

Practical Application of the Diagram.

It was stated, in the description of Stephenson's link-motion upon page 59, in what manner the different dimensions would be signified in the course of the investigation, and only with regard to the value of u is it necessary to make a few remarks. u expresses the distance between that point M of the link (Fig. 5, Plate II.) which gives motion to the valve and the dead-point J. Of course *this* value differs according to the situation of the hand-lever: it has to be substituted into the following formula as positive, if M lies above J, but as negative if the link is raised so far that the point M lies below J. If the link is raised or lowered to the utmost, then u has the greatest value, which we call c_1; and it is thus in the link shown in Fig. 6, Plate II., J K = J K$_1$ = c_1, where c_1 is less than c; but in the link Fig. 7, Plate II., it may be J K = $c_1 = c$. The lengths J K or J K$_1$ may now be divided into a number of equal parts, which are numbered above and below the dead point J; and we may say the slide-block is in the 1st, 2nd, 3rd . . . grade fore-gear or back-gear. In practice, these grades are not marked upon the link, but upon the arc Q R (Fig. 5, Plate II.), where each notch corresponds with a certain grade. If c_1 is thus divided into n parts, and if the link is in the m grade, then

$$u = \frac{m}{n} \cdot c_1.$$

The theoretical investigation gave for the travel of the valve ξ in Stephenson's link-motion:

$$\xi = r \left(\sin \delta \pm \frac{c^2 - u^2}{c\,l} \cos \delta \right) \cos \omega \pm \frac{r\,u}{c} \cos \delta \sin \omega, \qquad (34)$$

Digitized by Google

where the upper sign is to be taken for open and the under one for crossed rods.

Putting for

$$r\left(\sin\delta \pm \frac{c^2 - u^2}{c\,l}\cos\delta\right) = A,$$

$$r\,\frac{u}{c}\cos\delta = B,$$

we may write more simply

$$\xi = A\cos\omega + B\sin\omega. \qquad (35)$$

For a certain position of the link there is thus in these formulæ u a known quantity; and if the other dimensions are also known, the two values of A and B can be calculated. Marking now on the centre-line $X X_1$ (Fig. 2, Plate I.) from O the two values $O B = O B_1 = \frac{1}{2} A = a$, drawing the perpendiculars B C and $B_1 C_1 = \frac{1}{2} B = b$, and describing also from C and C_1 circles with the radii C O and $C_1 O_1$ we get, as the theory has shown, the valve circles, which fully explain, as in the simple valve-motion, the movements of the valve and the distribution of the steam, if we describe also here, as there, from O, with the outside and inside lap, the circles $V V_2$ and $W W_2$. The upper circle is for the forward stroke, the lower one for the backward stroke. As the proportions are equal for both strokes, we need examine the upper circle only.

The valve circle thus obtained only gives the distribution of the steam for the accepted position of the link, *i. e.* for the one grade; a special circle belongs to each grade, of which the centre co-ordinates $\frac{1}{2} A$ and $\frac{1}{2} B$ are to be calculated in the same manner. The designer has only to substitute the known dimensions and the corresponding value of u into the above equations.

If the link is raised so far, that its dead point lies above the centre line of the motion, the values of u are then substituted as negative, and the circles take the position shown in Fig. 4, page 13, for $\frac{1}{2} B$ becomes negative, and thereby indicates that the crank

Digitized by Google

moves in the opposite direction; the engine thus runs the other way. The distribution of the steam in this case is exactly the same as during the forward stroke, and we have therefore only to examine the latter. We need therefore, under all circumstances, only draw the upper valve-circle and suppose the ideal crank to turn from O X (Fig. 2, Plate I.) in the direction of the arrow.

The manner in which, after the circles are drawn, the distribution of the steam can be ascertained from their points of intersection, has been stated fully in explaining Fig. 2, Plate I., on page 21, and it need not therefore be repeated; it is, moreover, only our duty here to show on certain examples different peculiarities of this link-motion.

We shall chose at first a link-motion with *open eccentric rods and equal angles of advance*, and take at once fixed values for the dimensions.

Problem. Let the eccentricity of each eccentric $r = 0{\cdot}060^{m}$ (2·36″), the angles of advance, $\delta = 30°$; the length of the eccentric rods $l = 1{\cdot}400^{m}$ (55·1″); and the half-length of the link $c = 0{\cdot}150^{m}$ (5·9″). Let also the link have four grades of expansion for the fore-gear, and four for the back-gear, and let it be capable of being raised or lowered so far, that u becomes equal to c; and let it be constructed as represented in Fig. 6, Plate II.

Let the outside lap be $e = 0{\cdot}024^{m}$ (·94″), and the inside lap $i = 0{\cdot}007^{m}$ (·27″).

Any questions relating either to the various grades of expansion or to the dead point are to be answered.

According to the above, the valve-circles for the four grades of expansion are to be first determined, and the co-ordinates of their centres for *open* eccentric rods are to be calculated, as previously stated, according to the formulæ:

$$a = \frac{1}{2}\, r \left(\sin\delta + \frac{c^2 - u^2}{c\,l} \cos\delta \right) \text{ and}$$

$$b = \frac{1}{2}\, \frac{r\,u}{c} \cos\delta.$$

For the fourth grade of expansion $u = c$, and then according to the above formulæ,

$$O\,B_4 = \frac{1}{2}\, r \sin\delta \text{ and } B_4\,C_4 = \frac{1}{2}\, r \cos\delta \text{ (Fig. 8, Pl. II.),}$$

Digitized by Google

i.e. the movement of the valve takes place exactly as if the link were not there, and as if the forward eccentric only acted upon the valve; for the co-ordinates obtained are the same, as we found for the simple valve-motion.

We thus find, in Fig. 8, PlateII., the centre C_4 of the valve circle for the fourth grade of expansion, if we take

$$O\,B_4 = \frac{1}{2}\,r\,sin\,\delta = \frac{1}{2}\,.\,0{\cdot}06\,.\,sin\,30^\circ = 0{\cdot}015^m \text{ and}$$

$$B_4\,C_4 = \frac{1}{2}\,r\,cos\,\delta = \frac{1}{2}\,.\,0{\cdot}06\,.\,cos\,30^\circ = 0{\cdot}026^m,$$

or also, if we make the angle $Y\,O\,C_4 = 30^0$ and $O\,C_4 = \frac{1}{2}r = 0{\cdot}03^m$ (1·18″). The corresponding valve circle is marked IV.

For the third grade of expansion $u = \frac{3}{4}\,c$, and substituting this value as well as the other known values in the above equations, we get the co-ordinates of the valve circle centre C_3:

$$O\,B_3 = 0{\cdot}0162^m \text{ and } B_3\,C_3 = 0{\cdot}0195^m.$$

For the second grade $u = \frac{2}{4}\,c$, therefore the co-ordinates of the valve-circle centre C_2 are:

$$O\,B_2 = 0{\cdot}0171^m \text{ and } B_2\,C_2 = 0{\cdot}013^m.$$

For the first grade $u = \frac{1}{4}\,c$, therefore the corresponding co-ordinates according to the formulæ are:

$$O\,B_1 = 0{\cdot}0176^m \text{ and } B_1\,C_1 = 0{\cdot}0065^m.$$

Finally, for the *dead* point $u = 0$, thus:

$$O\,B_0 = \frac{1}{2}\,r\left(sin\,\delta + \frac{c\,cos\,\delta}{l}\right) = 0{\cdot}0178^m \text{ and } B_0\,C_0 = 0,$$

i.e. the centre of the valve circle for the dead point lies at C_0 or on the axis O X itself. Valve circles are now to be drawn from the centres C_0, C_1, C_2, C_3, C_4 with the radii $C_0\,O$, $C_1\,O$, $C_2\,O$, $C_3\,O$, $C_4\,O$, and these have been marked in the Figure for the corresponding grades of expansion 0, I., II, III, IV. If we describe from O a circle, with the radius $O\,V = e = 0{\cdot}024^m$ equal to the outside lap, and

Digitized by Google

another one with a radius equal to the inside lap O W $= i = 0{\cdot}007^{m}$, all questions will be answered by the Figure with great facility.

Let the crank be at first on the dead point; thus let the ideal crank be in the position O R, and let it be then turned in the direction of the arrow through any angle R O $R_1 = \omega$, then follow according to the known facts the following particulars (Fig. 8, Plate II.):

	Dead Point.	Grade of Expansion.			
		1.	2.	3.	4.
Travel of the valve	O P_0	O P_1	O P_2	O P_3	O P_4
Opening of the entrance port ..	V P_0	V P_1	V P_2	V P_3	V P_4
Opening of the exhaust port ..	W P_0	W P_1	W P_2	W P_3	W P_4

The required dimensions are thus obtained for all degrees of expansions in full size. Now, according to that which has been previously explained, the figure gives also the following dimensions, to which we have added the measurements as taken from the figure for the present special case, for the figure gives all dimensions relating to the travel of the valve—full size.

	Dead Point.	Number of Grades of Expansion.			
		1.	2.	3.	4.
Outside lead	$V_1 p_0$ $(0{\cdot}0115)^{m}$	$V_1 p_1$ $(0{\cdot}0110)^{m}$	$V_1 p_2$ $(0{\cdot}0100)^{m}$	$V_1 p_3$ $(0{\cdot}0085)^{m}$	$V_1 P_4$ (0·005
Inside lead	$W_1 p_0$ (0·0285)	$W_1 p_1$ (0·0280)	$W_1 p_2$ (0·0270)	$W_1 p_3$ (0·0255)	$W_1 P_4$ (0·022
Longest travel of the valve	O p_0 (0·0355)	O c_1 (0·0375)	O c_2 (0·0430)	O c_3 (0·0510)	O c_4 (0·059
Greatest opening of the entrance port	$V_1 p_0$ (0·0115)	$b_1 c_1$ (0·0135)	$b_2 c_2$ (0·0190)	$b_3 c_3$ (0·0270)	$b_4 c_4$ (0·035
Greatest opening of the exhaust port	$W_1 p_0$	$a_1 c_1$	$a_2 c_2$	$a_3 c_3$	$a_4 c_4$
Angle ω through which the crank has passed at the greatest opening of the ports ..	0	X O c_1	X O c_2	X O c_3	X O c_4

Practical men generally attribute special importance to the amount of the outside and inside lead, *i.e.* to the openings of the port for the admission and the release of steam when the crank is at the dead points.

Digitized by Google

According to the above the dimensions $V_1 p_4$, $V_1 p_3$, &c., give the lead for the 4th, 3rd, &c., grade of expansion; now, either from the table above given or from the Fig. 8, Plate II., it will be seen that the lead increases, as the expansion becomes greater, *i. e.* the nearer that point of the link which governs the valve approaches the dead point of the link.

This peculiarity, which only appears in Stephenson's link-motion with open rods, is well known in practice, and is very often considered to be a fault of Stephenson's link-motion.

In the present case the outside lead at the 2nd grade ($V_1 p_2$) is twice as large as that at the 4th grade ($V_1 p_4$). The lead for the dead point is the largest ($V_1 p_0$), and this point therefore gives the largest opening for the admission of the steam at the commencement of the stroke.

The reason for the variation of the lead is only to be found in the quantity

$$\frac{c^2 - u^2}{c\,l} \cos \delta$$

of the above formula for the abscissa a of the centre of the valve-circle. The smaller this quantity, *i. e.* the shorter the link and the longer the eccentric rod, the less variable is the lead.

The largest opening given to the admission port is a matter of importance; let it be supposed that the port has a width of $0{\cdot}034^{m}$ ($1{\cdot}18''$), it will be seen then from the fourth line of the above table, that the port is fully opened only when the link is quite lowered, thus at the 4th grade; and that the opening becomes always smaller, the more the link is raised, until finally, at the dead point the port is only opened at the most one-third of its width.

This narrowing of the ports is a disadvantage, and this is the reason why in all link-motions very broad valves are applied.

According to the Figure, the release port is only a little narrowed at the dead point, at all other grades of expansion it is fully opened when the valve is at the extremity of its stroke.

But all questions relating to the principal positions of the crank for each grade of expansion are also answered by the figure, if we fix the points of intersection of each valve-circle with the lap-circles,

Digitized by Google

and proceed in the same way as explained with regard to the simple valve-motion in Fig. 2, Plate I. The upper part of the Figure is obtained in this manner. The vertical lines represent the chief positions of the piston for all degrees of expansion. Again, the mode of fixing the position of the piston at the second grade is shown by dotted lines. If the piston travels from right to left, the admission of the steam on the *right-hand* side ceases at *a*, and at this point also the effect of the expansion begins; at *b* the release of the steam ceases on the *left-hand* side, and the effect of the compression begins; at *c* the release of the steam already begins on the *right-hand* side, and at *d* the admission of the steam on the *left-hand* side of the piston. It will be seen from the figure without anything further, that the compression and the release of the steam, as well as the admission of the steam on the other side of the piston begin sooner, the higher the expansion, *i. e.* the nearer the sliding block is to the dead point of the link.

A peculiar distribution of the steam takes place at the dead point; for the compression begins before the piston has travelled half of its stroke, and also shortly afterwards the release of the steam begins at the right-hand side, if the engine is running forwards. The dead point of the link, therefore, produces a distribution so unsuitable, that it is not able to effect a movement of the engine. Other peculiarities of the dead point may be easily found from the Figure by examining its valve-circle O.

The proportion of expansion and compression for any degree of expansion, may also be ascertained by the upper part of Fig. 8, Plate II. Let it be supposed that the positions *a*, *b*, &c., of the piston have been determined with regard to the length of the connecting rod in the manner previously explained; not therefore, as is done on the plate for want of space, by dropping upon H K perpendiculars from the chief positions of the crank-pin; then the required proportions may be found very easily. At *a* the admission of the steam ceases, therefore we have H *a* : H K the *proportion of expansion.* At *b*, the compression of the steam begins, because the release of the steam ceases here at the left-hand side; therefore H *b* : H K is the *proportion of compression.* The stroke of the piston in the Figure is H K = 1 decimetre (3·937″), and the dimensions H *a* and H *b* give there-

Digitized by Google

fore, expressed in decimetres, at once the required proportions; the measurements from the figure give for the present special case:

	Dead Point.	Number of the Grade of Expansions.			
		1.	2.	3.	4.
Proportion of expansion ..	0·165	0·335	0·535	0·690	0·800
Proportion of compression ..	0·390	0·580	0·730	0·845	0·905

If the length of the connecting-rod is taken into consideration, these proportions will be slightly different for the forward and backward strokes of the piston.

The author has made experiments on a model of the dimensions supposed in the example, and the results obtained have completely corresponded with those of the diagram.

Only those values need be given here in millimetres, which have been found for the outside lead.

	Dead Point.	Number of the Grade of Expansion.			
		1.	2.	3.	4.
Forward stroke	11·5 (0·45″)	11·0 (0·43″)	9·7 (0·38″)	8·2 (0·32″)	5·5 (0·211″)
Backward stroke	11·5 (0·45″)	10·7 (0·421″)	9·5 (0·374″)	7·4 (0·29″)	5·7 (0·224″)
Medium	11·5 (0·45″)	10·8 (0·424″)	9·6 (0·377″)	7·8 (0·30″)	5·6 (0·22″)

A comparison with the figures of the upper Table shows almost a complete coincidence; the differences are only fractions of a millimetre.

If we suppose in the above example *crossed* eccentric rods, the centres of the valve-circles for the higher degrees of expansions will fall in the same succession upon the left-hand side of the ordinate $B_4 C_4$, as shown in Fig. 10, Plate II., which has been drawn under the supposition of the same dimensions, and in which the co-ordinates of the centres of the valve-circles have been calculated according to the formulæ:

$$a = \frac{1}{2} r \left(\sin \delta - \frac{c^2 - u^2}{c\, l} \cos \delta \right)$$

$$b = \frac{1}{2} \frac{r\, u}{c} \cos \delta$$

Digitized by Google

for in the general formula (34), page 76, the lower sign is to be taken for crossed eccentric rods.

It will be seen at once from diagram Fig. 10, Plate II., that the fault in this arrangement is contrary to the one committed in that previously described, the lead, inside as well as outside, *decreasing the higher the degree of expansion.* According to Fig. 10, we have for the

4th grade the lead	$V_1 p_4 =$	$5 \cdot 5^{mm}$ (0·216″)
3rd „ „	$V_1 p_3 =$	$3 \cdot 6^{mm}$ (0·1417″)
2nd „ „	$V_1 p_2 =$	$1 \cdot 8^{mm}$ (0·07″)
1st „ „	$V_1 p_1 =$	$0 \cdot 8^{mm}$ (0·03″)
Dead point	$V_1 p_0 =$	$0 \cdot 4^{mm}$ (0·01″)

i.e. the opening of the ports at the dead point takes here place only for a moment. This decrease of the lead may become so great, that no outside lead at all is given, if the outside lap $O V_1$ has been taken too large. It will be seen from the upper part of the Figure, which shows the chief positions of the piston for the various grades of expansion, that the distribution of the steam in the present case is greatly different from that in the previous one. The most remarkable fact here is, that the position *d* of the piston is almost the same at all grades, *i. e.* that the pre-admission of the steam almost always takes place at the same point of the stroke.

How, on the other hand, to determine in the case of a link-motion the different dimensions required to fulfil given conditions with regard to the distribution of the steam, need not be examined any further here, as the mode of proceeding, according to the above diagram, does not present any further difficulties. (Compare the remarks at the end of the first chapter, page 38, and following.)

The variation of the lead in Stephenson's link-motion is generally considered to have a disadvantageous influence upon the effect of the steam, and this is the explanation of the efforts of practical men to invent arrangements of link-motions, in which the lead is constant or almost constant for all grades of expansion. We shall examine such valve-gears more minutely on a future occasion, and we shall now only describe the alterations which have been introduced into Stephenson's link-motion, in order to diminish as much as possible the variation of the lead. The method, which has been lately

Digitized by Google

applied very frequently, is remarkable for its simplicity, *viz. the eccentrics are simply fixed with different angles of advance.* This arrangement attains its aim almost completely, as our diagram will also show at once, *i. e.* the lead can be made through it almost constant for the forward motion of the locomotive; but experience shows that this improvement takes place at the expense of the backward motion, *i. e.* that the lead for the back gear is made by this arrangement so much worse, so much more variable; this also our diagram shows at once. Phillips first carried out the calculation regarding the above-named supposition; but he came, through his calculations, only to the conclusion, that in this manner *a better expansion might be obtained;* now this is perfectly true, but it is of no great importance in practice, as equally good results can be also obtained with equal angles of advance by a correct choice of the different dimensions. But the above-stated chief reason for the application of different angles of advance is not mentioned at all by Phillips; the other writers, Weisbach, Zech, and Redtenbacher, moreover, speak only of the more simple case.

Before beginning these investigations, we must recall to mind that the angle of advance is that angle, which the centre lines of the eccentrics O D and O D_1 form with the perpendicular O Y dropped upon the centre line O B of the stroke (Fig. 25), *when the crank* O R *occupies the dead point,* or in other words the position O R_0, if O Z

Fig. 25.

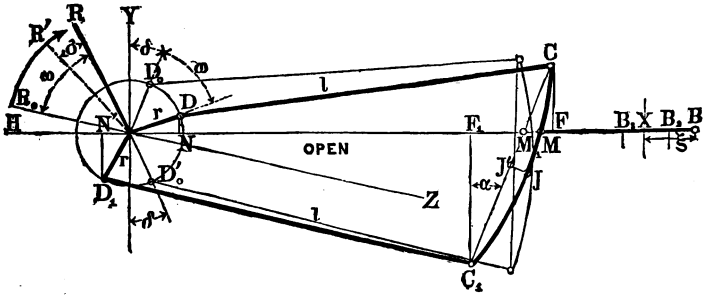

represents the centre line of the cylinder. At first open rods are supposed, as in Fig. 25. In this case O D is the so-called forward

and O D_1 the backward eccentric. Now, in order to get a less variable lead, the designers put the crank O R for a certain angle R O R′ = σ *further back*, about in the position O R′, as shown in the Figure by a dotted line; but thereby there are altered the values, which we have called the angles of advance; for if the new position O R′ of the crank passes through the dead point, thus through the line O R_0, then the eccentricity O D of the forward eccentric forms with the vertical line O Y the angle $\delta + \sigma$ and the eccentricity O D_1 of the backward eccentric with this vertical the angle $\delta - \sigma$; the angles of advance are therefore *different*. But it will be seen at once, that such changing of the position of the crank alters in the reciprocal arrangement of the different parts of the gear,—and therefore in the movement of the valve—*nothing at all;* but that there is *only* attained an alteration in the reciprocal positions of the piston and of the valve.

If we call the imaginary crank O R, the actual one O R′ and the angle through which the one must travel before it reaches the position of the other (for open rods), R O R′ = σ, then the diagram in Fig. 8, Plate II., which has been drawn for Stephenson's link under the supposition of open rods, will also be correct for the present case, as it relates only to the movements of the valve. But the distribution of the steam will be altered and will be different for the forward and backward stroke; for this reason we have Fig. 9, Plate II., which gives the diagram for the backward stroke. This diagram has simply been drawn according to previous theories, by drawing downwards, from the abscissa-axis O R, the ordinates for the centres of the valve circles. Returning to Fig. 8, Plate II., and taking for equal angles of advance the crank as being in O R, or in its dead point, the openings of the steam-ports at this position of the crank for the different degrees have been shown to be $V_1 p_0$, $V_1 p_1$, $V_1 p_2$, &c. Supposing now the crank to have turned through the angle R O R_1, then the diagram gives for the different grades the openings for the admission of the steam $V P_0$, $V P_1$, $V P_2$ &c.; belonging to the corresponding position of the crank; in the two cases, therefore, the openings for the different grades of expansion are very different. A close examination of the Figure shows that between the two positions of the crank there is one at which these openings

Digitized by Google

at the different grades are least different from each other; this is the position of the crank, which is represented by the line O R_0, and which passes through the point q_4, at which the valve-circle for the highest grade of expansion cuts the valve-circle belonging to the dead point. Making therefore the arrangement such, that the crank is on its dead point when it occupies the position O R_0, the openings of the steam-ports for all grades are least different from each other, or in other words, *the lead is least variable, when the crank in the position* O R_0 *is on its dead point.* The actual crank therefore must *follow behind the imaginary one as much as the angle* R O $R_0 = \sigma$. According to what is known, the diagram Fig. 8, Plate II., gives now the following values, which however, for the more correct measurement, have been obtained from a drawing executed to a larger scale.

I. Lead with *equal* angles of advance, during forward and backward stroke:

Fig. 8, Plate II.

4th grade of expansion	$V_1 p_4 =$ 5·5 mm (0·216″)
3rd „ „	$V_1 p_3 =$ 8.5 mm (0·337″)
2nd „ „	$V_1 p_2 =$ 10·0 mm (0·393″)
1st „ „	$V_1 p_1 =$ 11·0 mm (0·43″)
Dead point	$V_1 p_0 =$ 11·5 mm (0·45″)

II. Lead with *unequal* angles of advance, and thus under the supposition that the actual crank follows behind the imaginary crank as much as the angle R O R_0.

	Forward Motion. Fig. 8, Plate II.	Backward Motion. Fig. 9, Plate II.
4th grade of expansion	$V_0 q_4 =$ 11·3 mm (0·44″)	$V_0 q_4 =$ 0
3rd „ „	$V_0 q_3 =$ 12·3 mm (0·483″)	$V_0 q_3 =$ 3·7 mm (0·143″)
2nd „ „	$V_0 q_2 =$ 12·7 mm (0·497″)	$V_0 q_2 =$ 7·0 mm (0·26″)
1st „ „	$V_0 q_1 =$ 12·3 mm (0·483″)	$V_0 q_1 =$ 9·5 mm (0·36″)
Dead point	$V_0 q_0 =$ 11·3 mm (0·44″)	$V_0 q_0 =$ 11·4 mm (0·44″)

Hence follows, that the lead with equal angles of advance increases from the fourth grade to the dead point, and that as much as 6 mm (0·24″); but if the crank is turned further back, as much as the angle R O $R_0 = \sigma$, the lead remains almost constant for the forward stroke; it is equal and also smallest for the dead point and the last grade,

Digitized by Google

but largest at the second grade; but the entire difference amounts only to $1 \cdot 4^{mm}$ (0·05). (It need not appear here as remarkable, that the lead above stated is larger than is usual in practice; but in order to facilitate comparisons, we did not like to alter anything in our previous statements. Properly, the *outside lap* ought to have been taken a little larger with the altered position of the crank.)

It will be seen, therefore, that the designers reach their aim with surprising perfection, of course, only for the forward motion; but the variations are so much more unfavourable for the backward motion; the lead decreases here from the dead point to the fourth grade as much as $11 \cdot 4^{mm}$ (0·45″). Sometimes no lead at all will take place at the last grades, but the admission of the steam will only begin when the crank is *past* its dead point. But all this is only applicable to *open* eccentric rods; it will be a little different for crossed ones, as will be shown later.

The angle through which the crank in the case of open eccentric rods has to be turned back, has been found until now by experimenting on models; the eccentric was turned until it was ascertained at which positions of the eccentrics and the crank the leads varied least. But our diagram gives the corresponding positions instantaneously and with mathematical precision. But before showing by means of an example the way in which the aim is best reached, a few remarks may be made respecting the manner in which the distribution of the steam takes place. Taking again Fig. 8, Plate II., and examining, as an example, the distribution of the steam for the second grade of expansion, we fix the points of intersection of the valve-circle with the circles described with the laps as radii. Supposing equal angles of advance $V_3 O R$ gives, as is known, the angle at which the crank stands before the dead point, when the pre-admission of the steam begins. But with different angles of advance, the angle $V_3 O R_0$ is larger than before by the angle $R O R_0 = \delta$. The admission of the steam, therefore, takes place earlier during the forward motion *with different angles of advance than with equal angles of advance.* In the case of the backward motion it is just the reverse; in this case we have (Fig. 9, Plate II.)

angle $V_3 O R_0$ smaller than angle $V_3 O R$.

Digitized by Google

The same is the case with regard to the beginning of the exhaustion of the steam, for in (Fig. 8):

W_3 O R, as is known, represents with equal angles of advance the angle at which the crank stands *before* the dead point, when the exhaustion of the steam begins in front. Now, during the forward motion and with the altered position of the crank, we have

$$W_3 \text{ O R}_0 \text{ larger than } W_3 \text{ O R},$$

but during the backward motion

$$W_3 \text{ O R is smaller than } W_3 \text{ O R (Fig. 9)}.$$

It may therefore be asserted, that the distribution of the steam with respect to the beginning of the admission and exhaustion of the steam through altering the position of the crank, *is deteriorated for the forward motion, and improved for the backward motion*, because a too early beginning of the admission and release is found to be unsuitable. But this disadvantage may be much reduced by increasing the outside lap by a correct amount.

O V_2 (Fig. 8) shows the position of the crank at the beginning of the expansion. Now as

$$\text{angle } V_2 \text{ O R}_0 \text{ is smaller than angle } V_2 \text{ O R},$$

the expansion will take place earlier during the forward motion with different angles of advance. But if the outside lap is also increased, as it ought to have been in the present case, then the expansion can begin still earlier. Different angles of advance give thus under equal circumstances *an earlier cut-off of the steam; and the expansion will be more effectual* than with equal angles of advance, as had already been proved by Phillips. It has already been stated, that this is no advantage of any great importance.

But for the backward motion the reverse again takes place, the cut-off of the steam begins the same degree later, because V_2 O R_0 is larger than V_2 O R (Fig. 9).

Finally, O W_4 is the position of the crank at the beginning of the compression or of the cut-off of the steam behind the piston. According to that which has been stated previously, there exist no difficulties in

Digitized by Google

ascertaining from the diagram that the compression of the steam begins, with different angles of advance, during the forward motion *earlier*, and during the backward motion, at the same grade of expansion, *later*, than with equal angles. If the compression of the steam is really so disadvantageous as is generally supposed, the distribution of the steam would be also in this respect, for the forward motion, *deteriorated instead of improved*, by adopting different angles of advance; the whole advantage would then only be a lead which is constant for all degrees. Notwithstanding, designers now very often chose different angles of advance, and engine-drivers run the engines mostly with a high grade of expansion, as for general trains they raise or lower the link only very little. All this shows that the effect of the steam, notwithstanding the high compression, cannot be so unfavourable as it is usual to suppose. (Compare *Reuleaux*, Civiling, vol. iii., p. 43.)

The manner in which we find for a given case the angle at which, when open eccentric rods are used, the crank has to be put back in order to make the lead as little variable as possible, has already been explained; but an example will show still more the advantages of the diagram.

Problem.—A link-motion for locomotives, according to Stephenson's system with open eccentric rods, has to be constructed in such a manner, that the lead for the forward motion may vary as little as possible. The following suppositions have been made: the eccentricity $r = 0{\cdot}064^{m}$ ($2{\cdot}56''$), length of the eccentric rods $l = 1{\cdot}560^{m}$ ($60''$), width of steam ports $a = 0{\cdot}027^{m}$ ($1{\cdot}06''$). The lead for the highest grade is to be $v = 5^{mm}$ ($\cdot 196''$), and further the point K, at which the sliding block stands at the last degree, is to be distant from the dead point as much as $c_1 = \text{J K} = \frac{2}{3}\, c$ (link, as Fig. 7, Plate II.); whilst the half-length of the link $= \text{C J} = c = 0{\cdot}21^{m}$ ($8{\cdot}26''$); and thus $c_1 = 0{\cdot}14^{m}$ ($5{\cdot}5''$).

The valve and piston rod may be also situated in the same direction. The centre lines of the two eccentrics form the angle $\text{D O D}_1 = 151\frac{1}{2}°$, and the inside lap is to be

$$i = 4{\cdot}3^{mm}\ (\cdot 159'').$$

Digitized by Google

There is to be determined the outside lap and the whole distribution of the steam for the forward motion, if we suppose four grades of expansion, but chiefly the correct position of the crank has to be ascertained.

Solution.—We suppose next a crank, which bisects the angle D O D_1 (Fig. 26). With regard to this crank, angle:

Fig. 26.

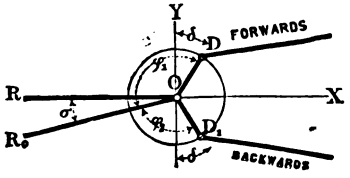

$$Y O D = \delta = 90 - \frac{151\frac{1}{2}}{2} = 14\tfrac{1}{4}^\circ.$$

We next calculate the co-ordinates of the centre of the valve-circle for the last grade of expansion, by substituting into the known formulæ for open rods:

$$a = \frac{1}{2} A = \frac{1}{2} r \left(\sin \delta + \frac{c^2 - u^2}{c l} \cos \delta \right)$$

$$b = \frac{1}{2} B = \frac{1}{2} \frac{r u}{c} \cos \delta$$

the given values, also c_1 for u and $14\frac{1}{4}^\circ$ for δ, and then get:

$$a = 0{\cdot}0102^m \ (0{\cdot}4'')$$

$$b = 0{\cdot}0207^m \ (0{\cdot}79'').$$

Now calculate the position of the centre of the valve-circle for the dead point, by putting in the above formulæ 0 for u, whence

$$a_0 = 0{\cdot}0120 \qquad b_0 = 0.$$

Make now in Fig. 11, Plate III.: O $B_4 = a = 0{\cdot}0102$, $B_4 C_4 = b = 0{\cdot}0207$, and O $B_0 = a_0 = 0{\cdot}0120$; describe from C_4 and B_0 the two valve-circles; these cross each other at Q. Draw now O Q, and the angle Q O X = R_0 O R = $\sigma = 5^0$ is that angle, at which in the present valve-gear the actual crank must follow the imaginary one. Drawing thus in Fig. 26, the line O R_0 so that it forms with O R the angle $\sigma = 5^0$, then R_0 O D = $\varphi_1 = 90 + \delta + \sigma = 109\frac{1}{4}^0$ is that angle, which the crank must form with the centre line of the forward eccentric, and R_0 O D_1 = $\varphi_2 = 90 + \delta - \sigma = 99\frac{1}{4}^0$ that angle which it must form with the backward eccentric.

Digitized by Google

As the crank has to pass through the dead point, when it arrives in the direction of the line O X, the angle of advance of the forward eccentric will be thus

$$\delta_1 = \varphi_1 - 90 = 19\tfrac{1}{4}^\circ,$$

and of the backward eccentric

$$\delta_2 = \varphi_2 - 90 = 9\tfrac{1}{4}^\circ.$$

The principal part of the problem is thus already solved, and that in such a simple manner as could scarcely be expected if we consider the movement of the link, which has always been supposed to be very complicated. The angle σ could also have been obtained through calculation; and as the result of this calculation is extremely simple, it may also be here given.

The formula for the movement of the valve with open rods is

$$\xi = r\left(\sin\delta + \frac{c^2 - u^2}{c\,l}\cos\delta\right)\cos\omega + \frac{u\,r}{c}\cos\delta\sin\omega.$$

But in Fig. 11, Plate III., O Q is nothing else but the movement of the valve corresponding to the angular movement σ: if we, therefore, substitute σ for ω and at the same time for the last grade c_1 for u, and for the dead point 0 for u, then follows in one case

$$O\,Q = r\left(\sin\delta + \frac{c^2 - c_1^2}{c\,l}\cos\delta\right)\cos\sigma + \frac{c_1\,r}{c}\cos\delta\sin\sigma,$$

and in the other case

$$O\,Q = r\left(\sin\delta + \frac{c^2}{c\,l}\cos\delta\right)\cos\sigma.$$

Putting both expressions for O Q as equal, we get after a few reductions:

$$tang.\ \sigma = \frac{c_1}{l}.$$

This simple expression shows that the angle at which the actual crank has to follow the imaginary one depends only *upon c_1 and the length l of the eccentric rod.* The smaller c_1 and the larger l, the less the position of the crank has to be altered, and the more the values of the two different angles of advance approach each other. It thus happens that equal angles of advance are still used in many link-motions; as in these gears c_1 is so small and l so large, that the changing of the position of the crank is not required, as even with

Digitized by Google

equal angles of advance the lead varies only very little. This is, for example, the case with the locomotive of the North-east Railway of Switzerland, from which the dimensions of the preceding example have been taken; the outside lap only has been taken different, as the example was for different angles of advance, whilst in this locomotive equal angles of advance were used. It has been proved above that the distribution of the steam is not improved by altering the position of the crank, and it would therefore be better in the construction of valve-gears, to make c_1 as small as possible and to use long eccentric rods, for the lead will be thus less variable. If the engine does not allow of the use of long eccentric rods, the application of different angles of advance will then always be an excellent way for improving the inequality of the lead; of course, at the expense of correctness during the backward motion of the engine. If we put, moreover, in the formula $tang.\ \sigma = \frac{c_1}{l}$ the values of c_1 and l, we get

$$\sigma = 5^0\ 8',$$

the same value as given by the diagram. But the formula has the great advantage, that σ may be already determined when nothing else is known of a link-motion, but the length of the eccentric rods and the distance of the guide-point from the dead point for the last degree of expansion. The formula gives also at the same time a more simple way of determining the angle, than the one above given. Construct a rectangular triangle with the sides c_1 and l, when the angle opposite to the side c_1 is the required one.

Calculation and construction show also another peculiarity when the position of the crank is altered in the manner stated, and which may be only briefly mentioned here. If there are given an even number of grades of expansion or, including the dead point, an uneven number, the point of intersection of two valve-circles, which are equally remote from the dead point and the farthest grade, will always fall for the forward motion on the line O R_0 (Fig. 8, Plate II.); thus, as an example, in the case of six grades of expansion, the lead is equal for the dead point and the sixth grade. Also that for the first and fifth; it is next largest (but only with open rods) for the second

Digitized by Google

and fourth and for the central one, and thus in this case for the third. (See Diagram, Fig. 8, and Table on page 87.)

Returning to the solution of the problem, we find the condition that the lead for the last grade has to be $v = 5^{mm}$ (·195″). Marking therefore upon O R_0, Fig. 11, Plate III., from Q towards O, the value $V_0 Q = v = 5^{mm}$ (·196″), O $V_0 = 0{\cdot}019^{m}$ (·748″) will be at once the required outside lap. Describing now from O circles with O V_0 and the given inside lap O $W_0 = 4{\cdot}3^{mm}$ (·169″) as radii, then the whole distribution of the steam for the last grade is also known. Connecting the points of intersection $V_3 V_4 W_3 W_4$ with O, the chief positions of the crank are obtained; describing also from O any circle which represents the crank-pin circle, drawing $L_0 L_1$ parallel to $R_0 R_1$, and making $L_1 L_0 = R_1 R_0$, then $L_0 L_1$ represents the stroke of the piston.

The line O V_3 cuts the crank-pin circle at R_3; and dropping upon $L_0 L_1$ the perpendicular $R_3 L_3$, we get O R_3 the position of the crank before the dead point and L_3 the position of the piston before the end of the stroke, when the admission of the steam begins at the right-hand side.

O R_4 is the position of the crank and L_4 that of the piston at the end of the admission of the steam, and thus at the beginning of the expansion; $L_0 L_4 : L_0 L_1$ is the proportion of expansion with the last grade.

O R_5 is the position of the crank before the dead point, and $L_0 L_5$ the distance of the piston from the end of its stroke, when the release of the steam begins on the left-hand side. Finally, O R_6 is the position of the crank and L_6 is the position of the piston at the end of the exhaustion of the steam behind the piston, *i.e.* at the beginning of the compression; and $L_0 L_6 : L_0 L_1$ is the proportion of compression.

The different positions for the other degrees of expansion are obtained in the same manner; the co-ordinates of the centres of the valve-circles are at first calculated according to the known mode, and the points of intersections of the valve-circles with the lap-circles are also determined, &c.

If it is desired to examine the distribution of the steam for the backward motion, which with different angles of advance is different from that of the forward motion, a diagram is to be constructed, as

Digitized by Google

shown in Fig. 9, Plate II., and the crank is supposed to be turned in the reverse direction to O R, thus in the direction of the arrows. It is not to be forgotten that O R_0 represents the position of the crank at its dead point, and that all angles must be measured from that position; whilst with equal angles of advance we have to start from the position O R.

Besides this, there is nothing new to be added.

We have expressly supposed in the above example, that the centre-line of the cylinder coincides with the direction of the valve-face; but if that is not the case, and if, moreover, the two directions O Z and O Y (Fig. 27) form an angle X O Z = α, we have to proceed as follows:

Fig. 27.

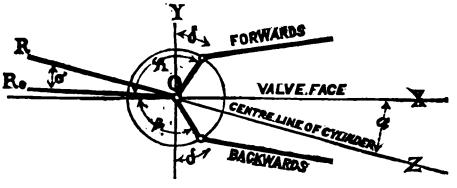

Construct the diagram for equal angles of advance, and draw, as in Fig. 27, the two eccentricities O D and O D_1, so that they form with the line O Y, which is vertical to the direction of the valve-face, equal angles δ. The position of the eccentricities is thus obtained at the moment in which the crank passes through the dead point, or occupies the position O R, supposing that we had to construct a valve-motion with equal angles of advance.

If we intend, however, to employ different angles of advance, in order to obtain a lead as constant as possible, the crank is then put *back* towards O R_0 as much as the angle σ, an angle shown to be required by the diagram or by calculation.

It thus follows that the angle which the crank forms with the eccentricity of the forward eccentric is:

$$R_0 O D = \varphi_1 = 90 + \delta - \alpha + \sigma,$$

and the angle, which the crank forms with the eccentricity of the backward eccentric, is:

$$R_0 O D_1 = \varphi_2 = 90 + \delta + \alpha - \sigma,$$

as will be seen from Fig. 27 without any further explanations.

Digitized by Google

But the above rule is at present only correct for Stephenson's valve-gear with open rods and *when the valve-rod is moved diredly by the link*, as it has been supposed in Fig. 5, Plate II. But if the link acts upon a bell-crank lever, of which that arm, which is connected with the sliding block of the link has the length a, and the other arm, which moves the valve-rod, the length b, then: 1st, the crank $O R_0$ (Fig. 27) is to be turned for 180°; and 2nd, in all formulæ which have been given above for Stephenson's valve-motion, the factor $\frac{b}{a} r$ is to be substituted for the eccentricity r.

If, finally, the rods are crossed, then, according to previous statements, the positions of the centres of the valve-circles are calculated according to the formulæ:

$$a = \frac{1}{2} A = \frac{1}{2} r \left(\sin \delta - \frac{c^2 - u^2}{c l} \cos \delta \right)$$

$$b = \frac{1}{2} B = \frac{1}{2} \frac{r u}{c} \cos \delta,$$

whence a diagram like Fig. 10, Plate II., is obtained.

The angle through which the crank must be turned, in order to get a lead as constant as possible, may be obtained from the diagram in the same manner as already stated in the case of the valve-gear with open rods, with this exception only, that the crank must in this case be turned forwards through the angle σ, *i.e.* towards the forward eccentric.

On the "Missing Quantity" in the Formula of Stephenson's Link-motion.

We get according to equation (II^a) and (II^d), pages 63 and 65, for the movement of the valve the more correct expression:

$$\xi = r \left(\sin \delta \pm \frac{c^2 - u^2}{c l} \cos \delta \right) \cos \omega \pm \frac{u r}{c} \cos \delta \sin \omega + \frac{r^2}{2 l} \left(\cos 2 \delta \sin \omega \pm \frac{u}{c} \sin 2 \delta \cos \omega \right) \sin \omega.$$

The valve only moves symmetrical to both sides of a fixed

Digitized by Google

point, when the third quantity, the so-called "missing quantity," disappears, or, as it cannot disappear altogether in any case, when it is as small as possible. But this is always the case, when the eccentric rods are long and the eccentricities are small; it is therefore in the construction of the link-motion of great importance to fulfil these conditions. The adjustment of the valve has always to be conducted in such a manner, that this "missing quantity" influences the movement of the valve at those positions of the crank, at which a little difference from the results of the diagram has the least effect upon the admission or the release of the steam; this quantity has to be therefore especially small near the dead points, where the ports are least opened. The latter condition is thus fulfilled, when the valve is adjusted to give equal lead, *i.e.* when the ports are equally opened, at the times that the crank passes through the one or the other dead point. Our formulæ are obtained under the last supposition, and the fact, that the "missing quantity" disappears in the formula for the movement of the valve when $\omega = 0$ or 180°, and that for ξ the exact value is really obtained from the diagram, shows as a necessary consequence that the required condition has been fulfilled. As this is the case for all positions of the link, the result thus follows, that the adjustment of the valve is only required for one grade of expansion; if for this grade an equal lead is obtained, then it will be equal without anything further on both sides of the valve for all positions of the link. It is of no practical use to go on any further with the investigation of the influence of this quantity. If it is, however, necessary to apply very short eccentric rods,* and if it is then desired to obtain exact information about the movement of the valve, it is best to construct the curves instead of the valve-circles; these curves are obtained through the application of the "missing quantity" by substituting for ω in the above formulæ (II^a and II^d, pp. 63 and 65) different values successively, and calculating ξ and marking its value from O upon the direction of the crank. If these points are connected, we obtain in place of the valve-circles a looped curve, which gives in connection with the lap-circles, in the known

* In this case it is desirable to take the laps, especially the inside one, not too small, or else the release will not take place with sufficient regularity.

Digitized by Google

manner, the chief positions of the crank, or the distribution of the steam; the differences between these results and those of the circle diagram will then show, whether the chosen dimensions of the link-motion gear produce an advantageous distribution of the steam.

CHAPTER II.

Link-motion by Gooch.

Description of the valve-motion.

THE valve-motion by Gooch belongs to that class of motions with variable expansion, which has for all grades of expansion a constant lead. Fig. 12, Plate III., shows in general the arrangement of the different parts of this construction. The two eccentrics D and D_1 are fastened to the axle O and govern the eccentric rods B C and $B_1 C_1$, which are connected at their ends with the link $C C_1$. The link is also curved to a certain radius and has a slot formed in it, but its convex side is turned towards the axle. The link cannot be raised or lowered, as at Stephenson's link-motion; but at the point J, the dead point, it is fastened to a link which swings on the fixed point L. The point J thus swings in an arc backwards and forwards at each revolution of the axle; but as the radius of this arc is always very large, we may suppose, without committing a great error, that the point J oscillates in the direction of the stroke.

The sliding-block K, fastened to the radius-rod $B_1 K$, can move up and down in the slot of the link, whilst the other end B_1 is connected with the valve-spindle, so that this point B_1 moves in the direction of the movement of the valve. The raising or lowering of the radius-rod is effected by the lifting-arm S T, which is again carried by a bell-crank lever, which is moved by the driver by a hand-lever, in the same manner as described in the case of Stephenson's link-motion. Figs. 28 and 29 represent the different parts of the valve-gear by lines only; the former is for *open*, the latter for *crossed rods*. In the following we signify the different parts in the same manner as previously: $O D = O D_1 = r$ are the eccentricities, which here *always*

Digitized by Google

form with the normal line O Y the equal angles of advance $Y\,O\,D_0 = Y_1\,O\,D^1{}_0 = \delta$; the length of the eccentric rods $D\,C = D_1\,C_1$ is again l; the length of the radius-rod $K\,B_1 = l_1$; the length of the valve-spindle, measured as far as the centre of the valve $B_1\,B = l_2$; the half-length of the link $J\,C = J\,C_1 = c$ and the variable distance of the sliding-block from the dead point $J\,K = u$.

Fig. 28.

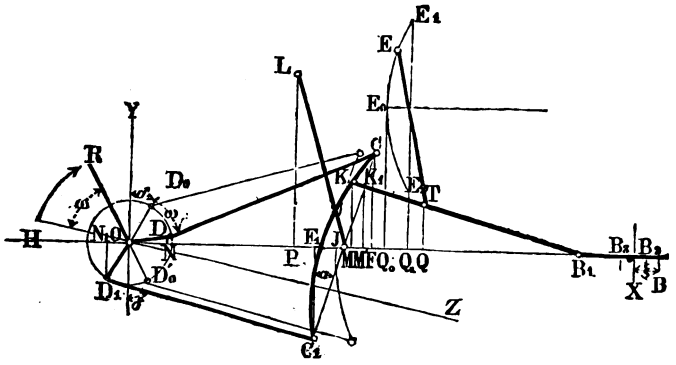

Fig. 29.

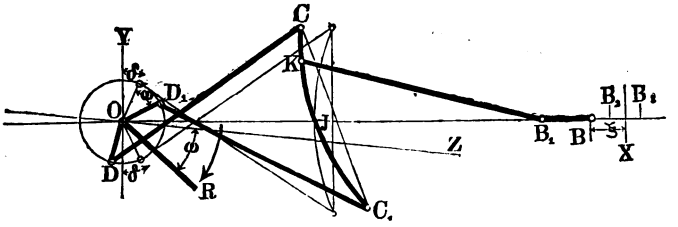

Theory of the Link-motion by Gooch.

a. Determination of the Travel of the Valve.

The thin lines in Figures 28 and 29 represent the positions of the different parts of the arrangement, when the crank stands at the one dead point, say in the direction O Z; if the crank is now turned from this position through the angle ω, the different parts will then arrive at the positions represented by the thick lines.

Digitized by Google

Now the problem is to determine the distance ξ of the valve from its centre of motion for this angle ω and for any position of the sliding-block K or any value u.

We shall again suppose that at first *open* eccentric rods are used (Fig. 28), and to begin with, shall consider the link C C_1 to be straight,

The angle α, which the chord of the link forms with a line vertical to the centre line of motion for any angular movement, has already been determined on page 61, equation (12), under the supposition that the dead point J of the link oscillates in the centre line of motion, as it is here the case. We get:

$$\sin \alpha = \frac{r}{c} \cos \delta \sin \omega - \frac{r}{l} \sin \delta \sin \omega + \frac{r^2}{4\,c\,l} [\cos^2 (\delta - \omega) - \cos^2 (\delta + \omega)].$$

If we drop from the point C upon the centre line of motion the perpendicular C F, then is

$$O\,F = O\,N + N\,F = O\,N + \sqrt{D\,C^2 - (C\,F - D\,N)^2}$$

or according to the above significations:

$$O\,F = r \sin (\delta + \omega) + \sqrt{l^2 - [c \cos \alpha - r \cos (\delta + \omega)]^2}.$$

If we transform the expression under the root into a progression, neglect the quantities which have l^2 in the denominator and put $\cos \alpha = 1$,—for α has always a very small value,—then follows:

$$O\,F = r \sin (\delta + \omega) + l - \frac{c^2}{2\,l} + \frac{r\,c \cos (\delta + \omega)}{l} - \frac{r^2 \cos^2 (\delta + \omega)}{2\,l}. \qquad (36)$$

Now, the distance of the centre B of the valve from the centre O of the axle is

$$O\,B = O\,M + M\,B_1 + B\,B_1 \text{ or}$$
$$O\,B = O\,F - M'\,F - M\,M' + M\,B_1 + B\,B_1.$$

O F is known according to equation (36), and further

$$M'\,F = (c - u) \sin \alpha;$$

Digitized by Google

where $sin\ \alpha$ is given according to equation (12). $M M' = K K_1$ or when the radius of the link $= \rho$:

$$M M' = \frac{c^2}{2\rho} - \frac{u^2}{2\rho},$$

$$M B_1 = \sqrt{B_1 K^2 - K M^2} = \sqrt{l_1^2 - u^2} \doteq l_1 - \frac{u^2}{2 l_1};$$

for l_1 is always large in proportion to u.

Finally $B B_1 = l_2$ and, therefore, after substitution and sufficient reduction:

$$O B = r\left(sin\ \delta + \frac{c}{l}\ cos\ \delta\right) cos\ \omega + \frac{u\,r}{c}\left(cos\ \delta - \frac{c}{l}\ sin\ \delta\right) sin\ \omega$$
$$+ l - \frac{c^2}{2l} - \frac{c^2}{2\rho} + \frac{u^2}{2\rho} + l_1 - \frac{u^2}{2 l_1} + l_2$$
$$- \frac{r^2}{4\,c\,l}\left[(c+u)\ cos^2(\delta+\omega) + (c-u)\ cos^2(\delta-\omega)\right]. \qquad (37)$$

The valve has now to move symmetrically backwards and forwards on both sides of a point X, the distance of which from O we have next to determine; it is also here supposed that the valve-motion is adjusted to give equal lead.

If the crank stands at the one dead point, then $\omega = 0$, and the distance of the centre of the valve from the centre of the axle will be:

$$O B_2 = r\left(sin\ \delta + \frac{c}{l}\ cos\ \delta\right) + l + l_1 + l_2 - \frac{c^2}{2l} - \frac{c^2}{2\rho}$$
$$+ \frac{u^2}{2\rho} - \frac{u^2}{2 l_1} - \frac{r^2}{2l}\ cos^2\delta.$$

For the second dead point, or for $\omega = 180°$ we get:

$$O B_3 = -r\left(sin\ \delta + \frac{c}{l}\ cos\ \delta\right) + l + l_1 + l_2 - \frac{c^2}{2l} - \frac{c^2}{2\rho}$$
$$+ \frac{u^2}{2\rho} - \frac{u^2}{2 l_1} - \frac{r^2}{2l}\ cos^2\delta.$$

The arithmetical mean of the two values gives the distance of the centre of motion X from the centre of the axle.

$$O X = l + l_1 + l_2 - \frac{r^2}{2l}\ cos^2\delta - \frac{c^2}{2\,l\,\rho}(l+\rho) + \frac{u^2}{2\,\rho\,l_1}(\rho - l_1). \qquad (38)$$

Digitized by Google

But the centre of motion has to remain unaltered for all grades of expansion, *i.e.* for each value of u; that will, however, according to equation (38) only be the case when the last quantity which contains u is *nil.* This condition can and must be fulfilled in this valve-gear, for it is only necessary to make

$$\rho = l_1$$

i.e. the link of Gooch's link-motion is always to be curved to an arc, the radius of which is equal to the length l_1 of the radius rod.

Next equation (38) gives

$$O X = l + l_1 + l_2 - \frac{r^2 \cos^2 \delta}{2 l} - \frac{c^2}{2 l l_1}(l + l_1). \qquad (39)$$

Finally, the movement of the valve from its central position or the movement ξ for the angular movement ω and for the grade of expansion u

$$\xi = O B - O X;$$

or using equations (37) and (39), under the supposition that $l_1 = \rho$, and after a few reductions:

$$(III^a) \quad \xi = r\left(\sin\delta + \frac{c}{l}\cos\delta\right)\cos\omega + \frac{u\,r}{c}\left(\cos\delta - \frac{c}{l}\sin\delta\right)\sin\omega + \frac{r^2}{2l}\left(\cos 2\delta \sin\omega + \frac{u}{c}\sin 2\delta \cos\omega\right)\sin\omega.$$

If we suppose, however, *crossed* rods (Fig. 29), it is only necessary to put in the above formula c as negative, and we get at once for this case:

$$(III^b) \quad \xi = r\left(\sin\delta - \frac{c}{l}\cos\delta\right)\cos\omega - \frac{u\,r}{c}\left(\cos\delta + \frac{c}{l}\sin\delta\right)\sin\omega + \frac{r^2}{2l}\left(\cos 2\delta \sin\omega - \frac{u}{c}\sin 2\delta \cos\omega\right)\sin\omega.$$

As l is always large in proportion to r, and, moreover, in both formulæ the third quantity, "the missing quantity," in consequence of the supposed manner of the adjusting of the valve, is greatest at those points where it influences the distribution of the steam least,

Digitized by Google

this quantity may be neglected in both cases, and we get the movement of the valve for open and crossed eccentric rods:

$$\text{(III)} \quad \xi = r\left(\sin\delta \pm \frac{c}{l}\cos\delta\right)\cos\omega \pm \frac{u\,r}{c}\left(\cos\delta \mp \frac{c}{l}\sin\delta\right)\sin\omega$$

Substituting again for:

$$r\left(\sin\delta \pm \frac{c}{l}\cos\delta\right) = \mathrm{A}, \tag{40}$$

$$\frac{u\,r}{c}\left(\cos\delta \mp \frac{c}{l}\sin\delta\right) = \mathrm{B}, \tag{41}$$

then we have simply:

$$\xi = \mathrm{A}\cos\omega \pm \mathrm{B}\sin\omega. \tag{42}$$

The law of the movement of the valve is therefore again the known one.

b. On the Curve of Centres.

As we have found for the movement of the valve in Gooch's link-motion an equation of the same form as for the link-motion by Stephenson, we may also here consider the movements of the valve for a certain position of the link as chords of a circle, the co-ordinates of the centre of which are (Fig. 30):

$$\mathrm{O\,B} = a = \frac{\mathrm{A}}{2} = \frac{r}{2}\left(\sin\delta \pm \frac{c}{l}\cos\delta\right) \text{ and}$$

$$\mathrm{B\,C} = b = \frac{\mathrm{B}}{2} = \frac{r\,u}{2}\left(\cos\delta \pm \frac{c}{l}\sin\delta\right)$$

There is thus in this case also a valve-circle corresponding to each grade of expansion, *i.e.* for each value of u which is to be used.

Fig. 30.

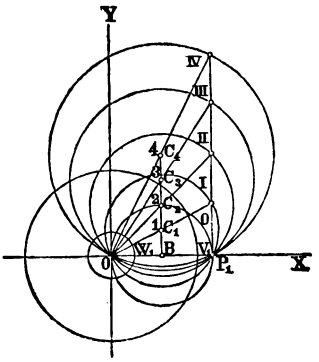

The centres of all these circles will be again situated in a curve, the curve of centres, the law of which is to be determined.

In Stephenson's valve-motion this curve was a parabola, but the matter is simpler at the present motion; for as the formula for the abscissa a does not contain the value u, it follows that the centres of all the valve-circles

Digitized by Google

have the same abscissa, and are thus situated in a perpendicular to the centre line of motion O B; the "curve" of centres is thus a *straight* line B C_4 (Fig. 30), which is normal to the centre-line of motion, and is distant from the centre of the axle for *open* eccentric rods as much as

$$\frac{r}{2}\left(\sin\delta + \frac{c}{l}\cos\delta\right); \tag{43}$$

but for *crossed* rods as much as

$$\frac{r}{2}\left(\sin\delta - \frac{c}{l}\cos\delta\right) \tag{44}$$

We found on page 66 the same expressions for Stephenson's link-motion, but they represent there the distance from the centre of the axle of the vertices of those parabolas, which form the curve of centres. The close relation between Gooch's link-motion and that by Stephenson follows also from the comparison of the "missing quantities" of the two motions; this quantity is in both constructions:

$$\frac{r^2}{2l}\left(\cos 2\delta \sin\omega \pm \frac{u}{c}\sin 2\vartheta\cos\omega\right)\sin\omega;$$

The remarks which have been made previously with reference to this quantity are also correct for the present valve-motion, and it is therefore useless to repeat them here.

c. On the Suspension of the Link and of the Radius-rod.

There are in Gooch's link-motion, as already mentioned, two suspension-links: the one L J (Fig. 31) carries the link and moves at L round a fixed pin, whilst its lower end is connected with the link. The latter point of connection is in practice generally fixed behind the curve towards the axle. But experiments with a model have shown that there are thus produced irregularities in the movement of the link, in consequence of which the slide-block K during the movement shifts up and down in the slot of the link, but that these irregularities are very much reduced if the point of suspension of the link is fixed nearer to the centre J of the chord.

It is very difficult to prove the correctness of this observation in a mathematical way; but it may be concluded from the above theo-

Digitized by Google

retical investigations. We have there always supposed, that the centre J of the chord of the link moves backwards and forwards on

Fig. 31.

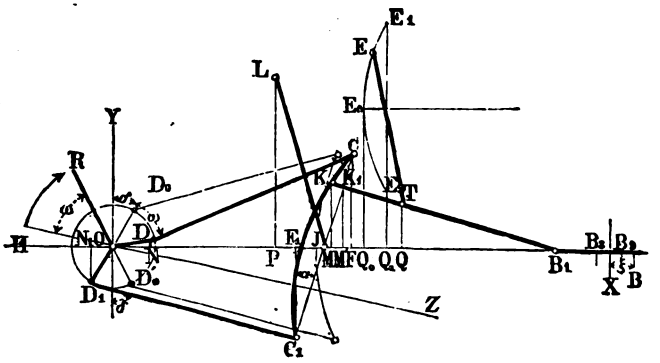

the centre-line of motion, and under this supposition have found, that the end point B_1 of the radius-rod B_1 K then moves symmetrically backwards and forwards to both sides of a point in such a manner that it is suited to govern a steam-valve. Thus would follow, that it must be a condition in practice that the centre of the chord should move as exactly as possible in the straight line O B. This condition is fulfilled if the link is suspended at this point J.

The next thing is now to ascertain the abscissa of the fixed point L; of course, the ordinate is the length of the suspension rod itself, and for this the only rule we have is, to make it as long as possible.

We may use, for determining the abscissa of L, equations already given.

Equation (25), page 69, gives the abscissa of the centre of the chord for that moment, when it passes through the centre of its arc of oscillation or through its centre of motion, and the equation is thus:

$$x = l - \frac{c^2 + u^2}{2\,l},$$

where it was supposed that the link was lowered as much as u. The question in the present case is the same, only here the link remains always so placed, that the point J moves backwards and forwards

Digitized by Google

almost exactly in the centre line of motion; we have thus $u = 0$, and the abscissa of the centre of oscillation is, therefore, more simply

$$x = l - \frac{c^2}{2l}, \tag{45}$$

Now as the suspension rod has to be in a vertical position, when the point J passes through its centre of oscillation, *the above formula gives also the abscissa of the point of suspension* L, measured on the centre line of motion from the centre O of the axle; it is thus only requisite to substract simply the versed sine of the arc of the link from the length of the eccentric rods.

The *second* suspension rod E T carries the radius rod. As the latter has to be raised or lowered, the point of suspension E must be movable. The question is now, in what curve this movement must take place, so that the sliding-block K may alter its position in the link as little as possible; it is therefore the problem, to arrange the suspension in such a manner, that the vertical movement of the point T is a minimum. As T is supposed to move in an arc of the radius E T, this vertical movement will be very small, when E T is large and the chord is parallel to the centre line of motion O B; it is unnecessary to say much here on the first condition, and we shall therefore at once consider the second one. For that purpose we determine next the horizontal movement of the point T for any grade u; thus the variable abscissa O Q is:

$$O\,Q = O\,B - B\,B_1 - B_1\,Q.$$

But O B is known according to equation (37), page 101. Neglecting then the last quantity, which contains the very small factor $\frac{r^2}{4cl}$, and substituting also, as required, l_1 for ρ, there follows:

$$O\,B = r\left(\sin\delta + \frac{c}{l}\cos\delta\right)\cos\omega + \frac{ur}{c}\left(\cos\delta - \frac{c}{l}\sin\delta\right)\sin\omega + l + l_1 + l_2 - \frac{c^2}{2ll_1}(l + l_1).$$

Digitized by Google

Next we have $B B_1 = l_2$ and $B_1 Q = \sqrt{B_1 T^2 - Q T^2}$; putting also $B_1 T = l_0$ and, as previously, approximately $K M = u$, then is:

$$Q T = \frac{l_0}{l_1} u, \text{ thus}$$

$$B_1 Q = \sqrt{l_0^2 - \frac{l_0^2 u^2}{l_1^2}},$$

or approximately, for l_1 is always very large in proportion to u,

$$B_1 Q = l_0 \left(1 - \frac{u^2}{2 l_1^2}\right).$$

We get thus:

$$O Q = r \left(\sin \delta + \frac{c}{l} \cos \delta\right) \cos \omega + \frac{u r}{c} \left(\cos \delta - \frac{c}{l} \sin \delta\right) \sin \omega + l + l_1 - l_0 + \frac{l_0 u^2}{2 l_1^2} - \frac{c^2 (l + l_1)}{2 l l_1}.$$

Substituting in this equation in the first place 0 for ω, and in the second place 180 for ω, and taking the mean x of the two values obtained, we get:

$$x = l + l_1 - l_0 - \frac{c^2 (l + l_1)}{2 l l_1} + \frac{l_0 u^2}{2 l_1^2} \qquad (46)$$

and this *is the abscissa of the point of suspension* E for the corresponding position of the radius rod.

If l_3 is the length of the suspension rod, the ordinate is approximately:

$$y = l_3 + \frac{l_0}{l_1} u. \qquad (47)$$

If the sliding-block is at the dead point of the link, then $u = 0$, and, therefore, the co-ordinates for this position:

$$O Q_0 = l + l_1 - l_0 - \frac{c^2 (l + l_1)}{2 l l_1} \quad \text{and} \quad Q_0 E_0 = l_3. \qquad (48)$$

The point E_0 is thus found by a simple calculation. If the radius rod occupies the highest or lowest position, then $u = +c$ or $-c$, for the sliding-block K of valve-gears of the present construction can always be shifted into positions which coincide with the centre lines of the eccentric rods, thus to C and C_1. Substituting these values of

Digitized by Google

u in the equations (46) and (47), we get next for the two extreme positions E_1 and E_2 of the point of suspension the abscissa:

$$O\,Q_1 = l + l_1 - l_0 - \frac{c^2\,(l + l_1)}{2\,l\,l_1} + \frac{l_0\,c^2}{2\,l_1^2}, \qquad (49)$$

the ordinates, however, are:

$$Q_1\,E_1 = l_2 + \frac{l_0}{l_1}\,c \quad \text{and} \quad Q_1\,E_2 = l_2 - \frac{l_0}{l_1}\,c.$$

The point of suspension has thus to be moved in an arc, which passes through these three points $E_1\,E_0\,E_2$. But the combination of the two equations (46) and (47) gives again the peculiar result, that the curve which passes through the above points is a *parabola, the parameter of which is* $= 2l_1$ *or equal to double the length of the radius rod.* As now l_1 is always very large, the short part of the parabola, which lies near the vertex, may be replaced by an arc of the radius l_1, *i. e. equal to the length of the radius rod.*

This radius is taken much smaller in practice, and after the positions $E_1\,E_0\,E_2$ are marked according to the co-ordinates above calculated, these points are thus moved so far parallel to the centre line of motion, that the arc, passing through them, has the desired radius. But according to the preceding theory, the irregularities in the movement of the point K will increase, the smaller this radius is made.

The preceding theory of the suspension of the link is, moreover, right for *open* eccentric rods as well as for *crossed* ones.

Practical Application of the Diagram.

We may refer in the following to different facts which have already been stated during the investigation of the diagram of the simple valve-gear and of Stephenson's link-motion; even the significations for the present valve-gear have been taken as the same. It is here necessary, in order to examine the distribution of the steam effected by Gooch's link-motion, to draw the valve-circle for each grade of expansion, *i. e.* for each value of u, and thus to calculate the co-ordinates for its centre and to mark them on the drawing.

Digitized by Google

The theory gives for the movement ξ of the valve the formula:

$$(\text{III}) \quad \xi = r\left(\sin\delta \pm \frac{c}{l}\cos\delta\right)\cos\omega \pm \frac{ur}{c}\left(\cos\delta \mp \frac{c}{l}\sin\delta\right)\sin\omega,$$

in which the upper sign is to be taken for open eccentric rods, and the sign below for crossed eccentric rods.

The co-ordinates for the centres of the valve-circles are then:

$$\text{O B} = a = \frac{r}{2}\left(\sin\delta \pm \frac{c}{l}\cos\delta\right) \tag{51}$$

$$\text{B C} = b = \frac{ur}{2c}\left(\cos\delta \mp \frac{c}{l}\sin\delta\right), \tag{52}$$

these values may easily be calculated, if the values of r, δ, c, l, and u are known. For a given valve-gear u is the only variable quantity, and may be expressed in parts of c. As already stated, valve-gears of the present construction always allow the sliding-block K to occupy positions which coincide with the centre lines of the eccentric rods, and thus the greatest value of u is equal to $+ c$ or $- c$. The half-length c of the link is now again divided from the dead point towards both sides, into a certain number of equal parts or grades of expansion; if we have thus n parts and if the sliding-block is at m^{th} part, then is

$$u = \frac{m}{n} \cdot c.$$

By substituting this value in the above equations (51) and (52), the co-ordinates of the centres of the valve-circles for the corresponding grades will be obtained; and there may then be drawn the circle, which in connection with the lap circles will show the distribution of the steam for the corresponding grade in the manner already explained. It will be advantageous, to show at once by an example the manner in which all questions relating to the distribution of the steam of an existing or supposed valve-gear may be answered by the diagram.

Problem.—The following measurements are taken from a link-motion on Gooch's system:—Eccentricity $r = 0{\cdot}060^{\text{m}}$ $(2{\cdot}36'')$; angle

Digitized by Google

of advance $\delta = 20°$; half-length of the link $c = 0{\cdot}150^{m}$ (6″); length of the eccentric rods $l = 1{\cdot}2^{m}$ (48″); the outside lap $e = 0{\cdot}023^{m}$ (0·79″); the inside lap $i = 0{\cdot}006^{m}$ (0·23″); there are four grades of expansion for the forward gear and the same number for backward gear.

How is the distribution of the steam effected?

Fig. 32.

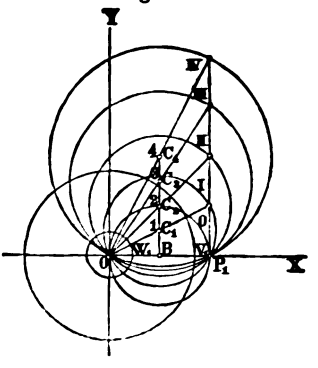

Calculate at first the co-ordinates O B and B C_4 of the centre of the valve-circle C_4 for the highest grade of expansion, thus for $u = c$ (Fig. 32). The formulæ:

$$O\,B = \frac{r}{2}\left(\sin\delta + \frac{c}{l}\cos\delta\right)$$

$$B\,C_4 = \frac{r}{2}\left(\cos\delta - \frac{c}{l}\sin\delta\right)$$

give, if the above values are used:

$$O\,B = 0{\cdot}014^{m}\ (5{\cdot}6'')\ \text{and}\ B\,C_4 = 0{\cdot}027^{m}\ (9{\cdot}8'')$$

If these two values are marked from O on the axis O X, as shown in Fig. 32, the centre C_4 of the valve-circle, corresponding to the last or fourth grade of expansion, is obtained. Describe from C_4 this circle with C_4 O as radius.

Next simply divide the ordinate B C_4 into as many parts as there are grades, thus in this case into four. The points of division C_1, C_2, and C_3 give then at once the centres of the valve-circles belonging to the different grades, and these circles are described from C_1, C_2, and C_3 with C_1 O, C_2 O, and C_3 O as radii. If finally circles are described from O with the outside lap $O\,V_1 = e = 0{\cdot}023^{m}$ and the inside lap $O\,W_1 = i = 0{\cdot}006^{m}$ as radii, then the diagram is complete. How, for each grade of expansion, the chief positions of the crank, as for instance, the beginning of the admission of the steam, of the exhaustion, of the expansion, of the compression, the greatest opening of the ports, &c., are to be obtained from the points of intersection of the valve-circles with the lap-circles, has been already explained, and it will therefore be unnecessary to repeat it here.

Digitized by Google

We need therefore only call attention to one peculiarity of this valve-gear; it will be seen that every valve-circle crosses the axis of the abscissa at the same point P_1; but now it is known that $V_1 P_1$ is the opening of the port for the admission, and $W_1 P_1$ is the opening of the port for the release, at the beginning of the stroke, or the outside and inside lead respectively; it will thus be seen, that the lead is the same for all grades. The measurements from the Figure, which is drawn half-size, give

the outside lead $V_1 P_1 = 0{\cdot}005^m$ $(0{\cdot}2'')$,
„ inside „ $W_1 P_1 = 0{\cdot}022^m$ $(0{\cdot}86'')$.

For the dead point of the link $u = 0$, therefore, the abscissa of the centre of its valve circle

$$O B = \frac{r}{2}\left(\sin \delta + \frac{c}{l} \cos \delta\right),$$

the ordinate, however, is *nil*, and thus the centre coincides with B.

We obtained the same result for the dead point of Stephenson's link, and it thus follows, that with equal dimensions of the two valve-gears the distribution of the steam by the dead point is exactly the same. The remarks on page 82 are therefore also correct for the present case. It is generally considered to be a great advantage, that in the case of the present valve-gear, the lead for open eccentric rods as well as for crossed ones, is constant, and this valve-gear is, therefore, considered to be better than that by Stephenson, in which the lead, as we have explained, increases with open rods and decreases with crossed ones, the higher the grade of expansion. But from the results obtained above, we are obliged to declare the valve-gear by Stephenson to be the better one. Gooch's valve-gear always requires a great distance between the driving axle and the cylinder, for the long radius rod has to be placed between the link and valve rod; and this arrangemnt will thus, especially in locomotive engines, be applied but seldom. If a constant lead is really so necessary, Stephenson's valve-gear may then be so constructed that, as we have shown, the lead in that case also becomes a constant one. Take a short link, long eccentric rods and different angles of advance, and the small variations of the lead, which may then occur with such an arrangement

Digitized by Google

of Stephenson's valve-gear, cannot possibly affect disadvantageously the action of the steam in the cylinder.

A second problem would be to design and construct for a steam-engine, perhaps for a locomotive, a valve-gear on Gooch's system by means of a diagram. There are no difficulties in doing this according to the methods which have been explained above. Certain parts, as the length of the eccentric rods, the length of the link, are already generally determined by the whole arrangement of the engine. If we have the choice, then, we have to start on the principle of making the eccentric rods as long, and the link as short, as possible. We next choose the angles of advance between 10° and 30°, the eccentricities between about 0·050^m (2″) and 0·080^m (3·2″) in such manner that the greater eccentricity corresponds with a smaller angle of advance. We may now at once draw the diagram for the last grade of expansion, and obtain by O P_1 (Fig. 32) the movement of the valve from its central position at the commencement of the stroke of the piston. If we mark now from P_1 towards O the distance $P_1 V_1$ equal to the outside lead, amounting generally from 0·004^m (0·16″) to 0·007^m (0·28″), we get by O V_1 the outside lap, which is generally between 0,020^m (0·8″) and 0·040^m (1·6″). If the diagram shows this lap too large, a smaller angle of advance or a smaller eccentricity is then to be taken. The inside lap is generally taken between 0·001^m (0·04″) and 0·007^m (0·28″).

The above rules are also correct for Stephenson's valve-gear, only in such a case the outside lap has to be chosen with regard to the variability of the outside lead. We have to draw, therefore, the valve-circle for the dead point, and examine whether the lead for the inner grades of expansion with open rods is, perhaps, not too large, or with crossed rods under the chosen proportions not too small. Finally, as for the suspension of the link and of the radius-rod, we refer to the results of the theoretical investigations.

Digitized by Google

CHAPTER III.

Link-motion by Allan.

Description of the valve-gear.

In Stephenson's link-motion, as well as in that by Gooch, the link is curved to an arc, which in the former has a radius equal to the length of the eccentric rod, and in the latter equal to the length of the radius rod. We have already proved, in a theoretical manner, that it has to be so, when the point from which the valve moves symmetrically forwards and backwards has to remain fixed for all grades of expansion, as is required for a regular and correct distribution of the steam.

But the construction of a curved link to a large radius incurred formerly great practical difficulties, and the often-repeated question, whether the curved link could not be replaced by a straight one, was thus quite natural. But the arrangement of the different parts of Stephenson's and Gooch's link-motion gear does not allow this, as may easily be proved theoretically.

Take, in equations (14), p. 63 and (38), p. 101, the radius of the curved link ρ as infinitely large, and two equations are obtained, the first one for Stephenson's link-motion gear, and the second one for Gooch's gear, which give the distance of the centre of motion of the movement of the valve from the centre of the axle. These equations will then show that, under the given supposition, the centre of motion of the valve *moves farther and farther* from the centre of the axle the more the link or the radius rod is *raised or lowered* above or below the dead point of the link, the former in Stephenson's, and the latter in Gooch's gear. But the consequence of such an alteration of the centre of motion would be, that the admission and the release of the steam, in fact, the distribution of the steam for the forward stroke would be a quite different one to that for the backward stroke.

The invention by *Allan*—an invention which was made also a little later by Trick in Germany, undoubtedly independent of Allan —appears thus the more interesting. Both Allan and Trick apply

Digitized by Google

a *straight* link, and attain their end perfectly, as theory will show, by the ingenious plan of raising or lowering the link and the radius rod of Gooch's link-motion gear *simultaneously*; *i. e.* the valve swings at *all* grades of expansion symmetrically backwards and forwards on either side of a fixed point.

Fig. 13, Plate III., shows a general arrangement of Allan's link-motion.

The two eccentrics D and D_1, which are fastened to the axle O with equal angles of advance, govern the two eccentric rods D C and D_1C_1, which are again coupled at their farther ends C and C_1 to the link H H. The link has a straight slot, in which the sliding-block, connected with the end of the radius-rod B_1 K, can be moved up and down. The radius rod is connected at its end B_1 with the valve-spindle B_1 B, which itself works in fixed guides. The link is carried at its dead point J by the lifting-link S_1 J, whilst the lifting-link S T is at its one end fastened to the radius rod B_1 K; both lifting-links are connected at their other ends by a double lever S_1 L S, which is fixed to the weigh-bar L. To the same shaft is fastened the lever N, which can be moved by the driver through the reversing-rod P between the positions indicated in the Figure by dotted lines. It will now be seen that the link is lowered by turning the shaft L, whilst the sliding-block K in it rises, for the radius rod is then raised simultaneously; on the other hand, when the link rises, the radius rod is lowered. The various dimensions also must be in this link-motion in certain proportion, if the movement of the valve is to be a correct one. Everything depends here especially, as the theoretical investigations will show, upon the proportion of the two arms L S and S_1 L of the double lever S S_1.

For our following investigations we shall use the sketch, Fig. 33, and retain for the different parts the same designations as previously applied.

Thus let, as before: r = the eccentricity O D = O D_1, δ = the angle of advance, l = the length of the eccentric rods C D = C_1 D_1, c = the half-length J C = J C_1 of the link; l_1 = the length of the radius rod B_1 K and l_2 = that of the valve rod measured as far as the centre of the valve B. Let also the distance between the point of

Digitized by Google

connection T of the lifting-arm and the end point B_1 of the radius rod be l_0 and the two arms S_1 L and S L may be called a and b. Finally,

Fig. 33.

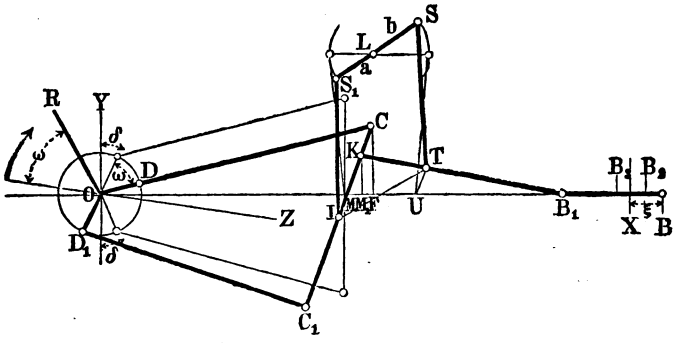

let the distance of the sliding-block K from the dead point J of the link for any position of the link be $= u$, thus J K $= u$. The link crosses at that position the centre line of motion O B at the point M; let the distance of this point from the dead point of the link be J M $= u$; and let the distance of the same point from the sliding-block K be M K $= u_2$, whence

$$u = u_1 + u_2.$$

Theory of the link-motion by Allan.

a. Determination of the movement of the valve.

We shall commence here also by writing down the equation, which gives the distance of the centre of the valve B from the centre O of the axle for a certain position of the link and any angular movement ω of the crank; we shall use the above-given designations and also a few equations, which have been found during our investigation of the theory of Stephenson's valve-gear, as we in that case also supposed at first a straight link. Let us suppose at first *open* eccentric rods.

Digitized by Google

According to Figure 33:

$$O B = O F - F M_1 + M_1 B_1 + B_1 B. \tag{53}$$

The different quantities on the right-hand side of this equation are part of them known, and part of them easy to determine. If we substitute in equation (10), page 61, u_1 for u we get next:

$$O F = r \sin(\delta + \omega) + l - \frac{c^2}{2l} + \frac{c u_1}{l} - \frac{u_1^2}{2l} + \frac{(c - u_1) r \cos(\delta + \omega)}{l} - \frac{r^2 \cos^2(\delta + \omega)}{2l}. \tag{54}$$

Further:

$$F M_1 = (c - u) \sin \alpha; \tag{55}$$

where, according to equation (11), page 61:

$$\sin \alpha = \frac{r}{c} \cos \delta \sin \omega - \frac{r}{l} \sin \delta \sin \omega - \frac{u_1 r}{c l} \cos \delta \cos \omega + \frac{u_1}{l} + \frac{r^2}{4 c l} [\cos^2(\delta - \omega) - \cos^2(\delta + \omega)]. \tag{56}$$

The value of $M_1 B_1$ is according to Fig. 33:

$$M_1 B_1 = \sqrt{B_1 K^2 - K M_1^2},$$

or as $B_1 K = l_1$ and $K M_1$ approximately $= u_2$:

$$M_1 B_1 = \sqrt{l_1^2 - u_2^2},$$

or near enough, for u_2 is small in proportion to l_1:

$$M_1 B_1 = l_1 - \frac{u_2^2}{2 l_1} = l_1 - \frac{(u - u_1)^2}{2 l_1}. \tag{57}$$

And finally

$$B B_1 = l_2.$$

Substituting these different values in equation (53), we get after sufficient reduction:

$$O B = r \left(\sin \delta + \frac{c^2 - u u_1}{c l} \cos \delta\right) \cos \omega + \frac{r u}{c} \left(\cos \delta - \frac{c (u - u_1)}{u l} \sin \delta\right) \sin \omega + l + l_1 + l_2 - \frac{c^2}{2 l} - \left[\frac{u_1^2}{2 l} - \frac{u u_1}{l} + \frac{(u - u_1)^2}{2 l_1}\right] - \left[\frac{c - u}{c} \cos^2(\delta - \omega) + \frac{c + u}{c} \cos^2(\delta + \omega)\right]. \tag{58}$$

Digitized by Google

If we substitute in this equation at first 0 for ω, and next time 180° for ω, and take the mean of the two values thus obtained, *i. e.* if we adjust the valve to equal lead, the distance of the centre of motion X of the valve from the centre of the axle will be:

$$O X = l + l_1 + l_2 - \frac{c^2}{2\,l} - \frac{r^2 \cos^2 \delta}{2\,l} - \left[\frac{u_1^2}{2\,l} - \frac{u\,u_1}{l} + \frac{(u-u_1)^2}{2\,l_1}\right], \qquad (59)$$

but u and u_1 are variable values, and the valve-gear would be thus quite useless, if the last quantity between the brackets could not be reduced to *nil*, *i. e.* if the centre of motion X could not be kept at the same place for every grade of expansion. But, fortunately, this may be done easily; and let us try for that purpose to ascertain the relation between u and u_1.

First, it is easy to see that the following proportion is correct, if we draw in Fig. 33, T U parallel to the link:

$$T U : K M = B_1 T : B_1 K,$$

or if $T U = u_x$:

$$u_x = \frac{l_0}{l_1}\, u_2. \qquad (60)$$

We may then also find the relation between u_x and u_1. The lifting-links $S_1 J$ and S T are of equal length, and when K is at the dead point, the points J and T fall on the centre line of motion and the lever $S S_1$ is parallel to the latter. As the weigh-bar is turned, the points J and T move in directions nearly vertical to O B, and under these suppositions it will be easy to prove that the following proportionate movement takes place:

$$T U : J M = S L : S_1 L,$$

or using the known significations:

$$u_x = \frac{b}{a}\, u_1. \qquad (61)$$

The combination of this equation with equation (60) gives

$$u_2 = \frac{l_1}{l_0}\,\frac{b}{a}\, u_1.$$

Digitized by Google

Therefore:

$$u_1 + u_2 = \left(1 + \frac{l_1}{l_0}\,\frac{b}{a}\right) u_1,$$

or, for $u_1 + u_2 = u$:

$$u = \left(1 + \frac{l_1}{l_0}\,\frac{b}{a}\right) u_1. \tag{62}$$

Next we put the constant value:

$$1 + \frac{l_1}{l_0}\,\frac{b}{a} = n \tag{63}$$

and get: $u = n\,u_1$. The value of n may always be calculated for a given valve-gear, when the proportion of the arms of the lever $b : a$, as well as the lengths l_1 and l_0 are known.

After these preparations, we return again to formula (59). We found that with Allan's valve-gear the following condition must be fulfilled under any circumstances:

$$\frac{u_1^2}{2\,l} - \frac{u\,u_1}{l} + \frac{(u - u_1)^2}{2\,l_1} = 0.$$

If we put now in this $u = n\,u_1$, we get:

$$\frac{1}{2\,l} - \frac{n}{l} + \frac{(n-1)^2}{2\,l_1} = 0,$$

and thus follows:

$$n = 1 + \frac{l_1}{l}\left(1 \pm \sqrt{1 + \frac{l}{l_1}}\right);$$

and combining this equation with (63):

$$\frac{b}{a} = \frac{l_0}{l}\left(1 \pm \sqrt{1 \pm \frac{l}{l_1}}\right). \tag{64}$$

This equation shows then, that Allan's valve-gear is only correct when the suspension rods are carried by a lever, the proportion of the arms of which is determined according to the last formula; and it is only then, that the variable quantity in equation (59) disappears, and the centre of oscillation of the valve remains for all grades unaltered in its position. The obtained proportion depends only on the length of the eccentric rod l, the length of the radius rod l_1, and the position of the point T upon the latter.

For the further investigations, we have to suppose the given

Digitized by Google

condition to be fulfilled by taking the positive sign before the root as the correct one.

But the value of O X follows then according to equation (59):

$$O X = l + l_1 + l_2 - \frac{c^2}{2\,l} - \frac{r^2 \cos^2 \delta}{2\,l}. \qquad (65)$$

and the movement of the valve is thus:

$$\xi = O B - O X.$$

Using the value of O B obtained by equation (58), and putting $u_1 = \frac{u}{n}$, we get, after sufficient reduction,

$$(IV^a) \qquad \xi = r\left(\sin\delta + \frac{n\,c^2 - u^2}{n\,c\,l}\cos\delta\right)\cos\omega + \frac{u\,r}{c}\left(\cos\delta - \frac{c\,(n-1)}{n\,l}\sin\delta\right)\sin\omega + \frac{r^2}{2\,l}\left(\cos 2\,\delta\,\sin\omega + \frac{u}{c}\sin 2\,\delta\,\cos\omega\right)\sin\omega.$$

All quantities containing c have to change the sign for *crossed* eccentric rods.

The third quantity of the last equation is again the "missing quantity," and it is exactly equal to that, which we not only have found for Stephenson's valve-gear, but also for that by Gooch. Neglecting this quantity in the present case also, we get for open and crossed rods:

$$(IV) \qquad \xi = r\left(\sin\delta \pm \frac{n\,c^2 - u^2}{n\,c\,l}\cos\delta\right)\cos\omega \pm \frac{u\,r}{c}\left[\cos\delta \mp \frac{c\,(n-1)}{n\,l}\sin\delta\right]\sin\omega.$$

But necessarily:

$$(IV^b) \qquad \frac{b}{a} = \frac{l_0}{l}\left(1 + \sqrt{1 + \frac{l}{l_1}}\right) \text{ and}$$

$$n = 1 + \frac{l_1}{l_0}\,\frac{b}{a}.$$

If we again designate the co-efficients of $\cos\omega$ and $\sin\omega$ by A and B, we get as for the other valve-gears:

$$\xi = A\cos\omega \pm B\sin\omega. \qquad (66)$$

Digitized by Google

b. On the curve of centres.

The curve, in which the centres of all the valve-circles belonging to the different grades of expansion are situated, may be obtained if the two equations for the co-ordinates

$$a = \frac{A}{2} = \frac{r}{2}\left(\sin\delta \pm \frac{n\,c^2 - u^2}{n\,c\,l}\cos\delta\right)$$
$$b = \frac{B}{2} = \frac{r\,u}{2\,c}\left[\cos\delta \mp \frac{c\,(n-1)}{n\,l}\sin\delta\right]$$

are combined with each other, by eliminating r. We find then that the curve here, as in the case of Stephenson's valve-gear, is a *parabola*, the vertex of which is distant from O for *open* rods by the amount:

$$\frac{r}{2}\left(\sin\delta + \frac{c}{l}\cos\delta\right), \tag{67}$$

and for *crossed* rods by the amount:

$$\frac{r}{2}\left(\sin\delta - \frac{c}{l}\cos\delta\right). \tag{68}$$

These formulæ are the same as those for Stephenson's gear.

With *open* rods the concave side of the parabola is turned towards the point of commencement O, and its parameter is:

$$\frac{n\,l\,r}{2\,c\cos\delta}\left(\cos\delta - \frac{c\,(n-1)}{n\,l}\sin\delta\right)^2. \tag{69}$$

With *crossed* rods, the convex side of the parabola is turned towards O, and the parameter is:

$$\frac{n\,l\,r}{2\,c\cos\delta}\left(\cos\delta + \frac{c\,(n-1)}{n\,l}\sin\delta\right)^2. \tag{70}$$

The parabolas are thus not equal for open and crossed rods, as in the case of Stephenson's gear. For the finding of the above formula, compare p. 65.

c. On the Suspension of the Link and of the Radius Rod.

The preceding theoretical investigation has shown, that if the construction is to be correct, the two arms S L and S_1 L of the double

Digitized by Google

lever S S_1 must be in a certain proportion, which is distinctly demanded by the other dimensions of the valve-gear; it was shown

$$\frac{b}{a} = \frac{l_0}{l}\left(1 + \sqrt{1 + \frac{l}{l_1}}\right),$$

and the fixed shaft L is placed between the two points of suspension; but Reuleaux has shown (Civilingenieur, vol. iii.), that tho points of suspension S and S_1 can also be placed upon *one* side of the turning point; but he adds quite correctly, that this suspension would be impracticable, and we shall not therefore examine it here, but speak only about the arrangement as given by Allan and as supposed for the above calculations.

If we examine, in the same manner as has been done in the case of the valve-gears formerly considered, in what curve the two points of suspension S and S_1 are to be moved, when the vertical movements of the link and of the sliding block are to be reduced as much as possible, we arrive at conditions which, however, are not fulfilled by Allan's method of suspension, for the two points of suspension have to be moved in parabolas or approximately in arcs, the radii of. which are equal to l and l_1, but which turn their *convex* sides towards the axle L. This condition could very well be fulfilled practically, by moving the two points S and S_1 in corresponding guides. Theoretically with regard to the present method of suspension, therefore, there is nothing to recommend, but to make in practice the lifting links as long as possible, and to make the whole length S S_1 of the double lever a little greater than the length T K. Thus about:

$$a + b = l_1 - l_0. \qquad (71)$$

As, however, the proportion $\frac{b}{a}$ is known from equation (IV^b), the actual positions of a and b are easily determined.

If the dead point J of the link lies on the centre line of motion, the lever S S_1 is then horizontal, and we find for this case, according to equation (27), page 69, that the abscissa of the point of suspension S_1, measured from O, must be,

$$l - \frac{c^2}{2l}$$

Digitized by Google

As the point L in this position lies as much as a further towards the right, the abscissa of the axis L is, exactly enough for practical purposes,

$$x = l + a - \frac{c^2}{2l}, \tag{72}$$

whilst the length of the two lifting-links gives the ordinate.

Practical Application of the Diagram.

In order to examine an existing valve-gear, or to arrange a new one, it is only necessary to know of the theoretical investigation above given three chief results, which are briefly expressed by the three following equations. The movement of the valve for any angular movement ω and any grade of expansion u was for open or crossed rods:

$$\text{(IV)} \quad \xi = r\left(\sin\delta \pm \frac{n c^2 - u^2}{n c l}\cos\delta\right)\cos\omega \pm \frac{u r}{c}\left(\cos\delta \mp \frac{c(n-1)}{n l}\sin\delta\right)\sin\omega,$$

the different figures, with the exception of u, have the signification above given (page 114).

But it is necessary that

$$\text{(IV}^b\text{)} \qquad n = 1 + \frac{l_1}{l_0}\frac{b}{a} \text{ and that}$$

$$\frac{b}{a} = \frac{l_0}{l}\left(1 + \sqrt{1 + \frac{l_1}{l}}\right).$$

In order to ascertain now, by the aid of the diagram, the distribution of the steam for each grade of expansion, we have again to draw the different valve-circles, the centres of which have the coordinates:

$$\text{O B} = a = \frac{r}{2}\left(\sin\delta \pm \frac{n c^2 - u^2}{n c l}\cos\delta\right)$$

$$\text{B C} = b = \frac{r u}{2 c}\left[\cos\delta \mp \frac{c(n-1)}{n l}\sin\delta\right].$$

Digitized by Google

An example will clearly show the application of this formula.

Problem.—An existing valve-gear on Allan's system has the following dimensions (Fig. 13, Plate III.).

Eccentricity	$r = 0{\cdot}070^{m}$ (2·75″)
Angle of advance	$\delta = 30°$
Length of the eccentric rods	$l = 1{\cdot}250^{m}$ (49″)
Half-length of the link .. C J = C J_1 =	$c = 0{\cdot}150^{m}$ (6″)
Length of the radius rod	$l_1 = 1{\cdot}500^{m}$ (60″)
Distance of the point T from the end B_1 of the radius rod	$l_0 = 1{\cdot}250^{m}$ (49″)
Lifting-arm $S_1 L = a$ of the Lever S S_1 ..	$a = 0{\cdot}075^{m}$ (2·9″)
Lifting-arm S L = b	$b = 0{\cdot}175^{m}$ (6·8″)
Outside lap	$e = 0{\cdot}024^{m}$ (0·9″)
Inside lap	$i = 0{\cdot}005^{m}$ (0·19″)

The valve-gear has crossed eccentric rods and four grades for the forward gear, and as many for the backward gear.

The sliding-block K stands at C or C_1 when the motion is in full gear; for these positions $u = +c$ or $-c$.

The distribution of the steam for all grades of expansion is to be examined, and besides any peculiarities of this valve-gear are to be ascertained from the diagram.

It is next to be examined whether the equation (IV^b) is fulfilled, for in that case only is the valve-gear useful; for otherwise the valve does not swing backwards and forwards at the different grades of expansion on either side of a fixed point. We must therefore have:

$$\frac{b}{a} = \frac{l_0}{l}\left(1 + \sqrt{1 + \frac{l}{l_1}}\right).$$

Substituting the given values, we have:

$$\frac{b}{a} = 2{\cdot}35$$

The given values of a and b are also in the same proportion; and in this way, therefore, there is no fault to be found with the valve-gear.

If we now calculate:

$$n = 1 + \frac{l_1}{l_0}\,\frac{b}{a} \text{ we get}$$

$$n = 2{\cdot}82.$$

Digitized by Google

For calculating the co-ordinates of the centres of the valve-circles, the following formulæ must be used, for there are crossed eccentric rods:

$$O\,B = a = \frac{r}{2}\left(sin\ \delta - \frac{n\,c^2 - u^2}{n\,c\,l}\ cos\ \delta\right)$$

$$B\,C = b = \frac{r\,u}{2\,c}\left(cos\ \delta + \frac{c\,(n-1)}{n\,l}\ sin\ \delta\right).$$

From these formulæ we get now the co-ordinates for the 4th or last grade of expansion, thus for $u = c$, if we use the known values:

$$O\,B = 0{\cdot}0151^m\ (0{\cdot}60'')\ \text{and}\ B\,C = 0{\cdot}0316^m\ (1{\cdot}24'').$$

Putting then in the corresponding formulæ successively

$$u = \tfrac{3}{4}\,c\,;\ u = \tfrac{2}{4}\,c\,;\ u = \tfrac{1}{4}\,c\ \text{and}\ u = 0\,;$$

we obtain the co-ordinates of the centres of the valve-circles:

For the 3rd grade .	$O\,B_3 = 0{\cdot}0146^m\ (0{\cdot}51'')$	$B_3\,C_3 = 0{\cdot}0237^m\ (0{\cdot}9'')$
„ 2nd „ .	$O\,B_2 = 0{\cdot}0138^m\ (0{\cdot}54'')$	$B_2\,C_2 = 0{\cdot}0158^m\ (0{\cdot}6'')$
„ 1st „ .	$O\,B_1 = 0{\cdot}0135^m\ (0{\cdot}53'')$	$B_1\,C_1 = 0{\cdot}0079^m\ (0{\cdot}3'')$
„ dead point .	$O\,B_0 = 0{\cdot}0132^m\ (0{\cdot}52'')$	0·

The co-ordinates are now marked as in Fig. 14, Plate III., and the centres C_0, C_1, C_2, C_3, and C of the valve-circles are thus obtained. Describe next the lap-circles with the laps $O\,V = e = 0{\cdot}024^m\ (0{\cdot}94'')$ and $O\,W = i = 0{\cdot}005^m\ (0{\cdot}23'')$ as radii, and the diagram is complete. In order to ascertain from the diagram the distribution of the steam, it is only necessary to repeat in this what has been already explained, and we refer therefore for further information to the diagram Figs. 8 and 10, Plate II., for Stephenson's valve-gear, and to what has been said about it on pages 80 and those following.

But we may call attention to one peculiarity of Allan's valve-gear with regard to the lead; it will be seen that in the present case, thus for *crossed* rods, the lead *decreases*, the higher the expansion; while the lead for the 4th grade is $0{\cdot}006^m$ (0·27″), it is for the 1st grade only $0{\cdot}003^m$ (0·11″): and the result would be the reverse one for open rods. It will thus be seen that Allan's valve-gear is in this respect similar to that by Stephenson; the variability of the lead is, however, under equal circumstances, as may easily be shown, always less in the case of Allan's than it is in Stephenson's gear.

Digitized by Google

But there is no reason for considering on that account that Allan's valve-gear is a better one, for the small advantage with respect to the lead is rather dearly purchased, as in this, as well as in Gooch's valve-gear, circumstances prevent its application for many cases, as the insertion of the long radius rod requires a far greater distance between steam-chest and driving-axle, than is the case in Stephenson's valve-gear.

There are no difficulties in ascertaining, according to the method which has been above explained, the different dimensions which are to be chosen for the design of a valve-gear; that which has already been said about Gooch's valve-gear, is in general also correct for Allan's gear; it is only necessary to add, that the proportion of the lever-arms $\frac{b}{a}$ must be chosen in such a manner, that the equation

$$\frac{b}{a} = \frac{l_0}{l}\left(1 + \sqrt{1 + \frac{l}{l_1}}\right)$$

is fulfilled.

The above investigations have shown how similar the constructions of the three valve-gears by Stephenson, Gooch, and Allan are; we found, notwithstanding the different arrangements, for all three valve-gears the same "missing quantity;" the dead point of the link governs, under equal circumstances, the movement of the valve in the same manner in the one as in the other of the valve-gears, and the respective diagrams show such coincidence, that we arrive at the conclusion that in respect to the distribution of the steam none of these gears deserve the preference.

In this respect only *one* doubt may still arise, and that is with reference to the lead; the question is often put, whether a constant lead for all grades is really of such importance for an advantageous distribution of the steam, as is believed by many, and whether, if a constant lead is not possible, a greater or smaller one at a higher expansion is to be permitted, *i. e.* whether in the case of Stephenson's and Allan's valve-gears, open or crossed eccentric rods should be applied. A correct answer to this question can perhaps only be obtained through exact experiments; for the present a certain

Digitized by Google

amount of the lead must be taken as advantageous, but it must also be admitted, according to the calculations by Reuleaux (Civilingenieur, vol. iii.), that the slight variations given by reversing-motions with variable expansion, have no disadvantageous influence upon the action of the steam in the cylinder. The valve-gears by Stephenson and Allan are thus in this respect not inferior to that by Gooch, supposing the dimensions are so chosen that the lead does not increase too much, or disappear perhaps altogether, as may happen when the outside lap with crossed rods is not correctly determined.

In conclusion, we must add also a few words about a peculiarity of a few executed locomotive valve-gears; namely, the laps are sometimes *different* on the two sides. Such an arrangement may be a necessity, when the chief positions of the crank, in consequence of a very short connecting rod, differ too much during the forward and backward strokes, and when the beginning of the expansion and of the exhaustion of the steam has to take place at *the same positions of the piston.*

But if the connecting rod is long enough, then there is no reason for the above arrangement, unless any fault in the construction of the valve-gear should require such an alteration. But this fault is then only to be found, as may be proved theoretically, in an incorrect suspension of the link or of the radius rod, supposing that we have a valve-gear on Stephenson's or Gooch's system, but if we have Allan's valve-gear, the proportion of the arms of the double lever, which carries the suspension rods may not have been chosen in a correct manner, so that it does thus not correspond with the above-given formula. If the suspension is a correct one, and if the eccentric rods are sufficiently long, then our theory gives, even if the "missing quantity" is taken into consideration, no results which indicate the necessity of such arrangement. If the valve is adjusted to equal lead for *one* grade, then it is equal on both sides for all other grades, even when the eccentric rods are short; as has been proved by theory and by experiments. Of course it is another question, whether with short eccentric rods the distribution of the steam will be an advantageous one for *all* grades of expansion; but this question is most decidedly to be answered in the negative. No possible alter-

Digitized by Google

ation in the valve can in the least improve the distribution of the steam in such valve-gears.

We give now in the following pages the investigation of two link-motions, which in respect to the arrangement of the different parts are quite different from those previously examined.

CHAPTER IV.

Link-motion by Heusinger von Waldegg.

Description of the Valve-gear.

THIS valve-gear is represented in side elevation by Fig. 15, Plate III. O is the centre of the driving-axle, upon which, besides the crank O R, there is fixed an eccentric E, the eccentricity O D of which forms a right angle with the centre line of the crank.

The eccentric rod D C gives to the link C C, which may turn round the fixed point J, an oscillating motion. The link has a curved slot, in which the sliding-block K, which is connected to the radius rod P K, can be moved up and down, by means of the lifting-link K H, in order to produce a variable expansion.

The radius rod P K is connected at its end P to two levers M S, which at their upper ends are fastened by a joint to the valve-spindle V V, whilst their other ends move in circular bearings S, which form parts of the cross-head W. Each lever M S has thus a very peculiar motion given to it; the end S moves with the piston-rod backwards and forwards, the point P gets from the link another oscillating motion, and the second point M is thus brought into such a motion as is suitable for working the valve, as experience has shown, and the following investigation will prove.

The different parts are shown in Fig. 34 by lines only, but are distinguished by the same letters. If the crank O R stands at the one of the dead points, thus in the position $O R_1$, the piston is at the beginning of the stroke, and the arm of the cross-head is at $T_1 S_1$. The centre line of the eccentric is at that moment at $O D_1$ and the link occupies the central position $C_1 J E_1$, the radius rod is in

Digitized by Google

the position $K_1 P_1$ and the lever, which governs the valve-spindle, in that marked $S_1 P_1 M_1$. If the crank is now turned through 180°,

Fig. 34.

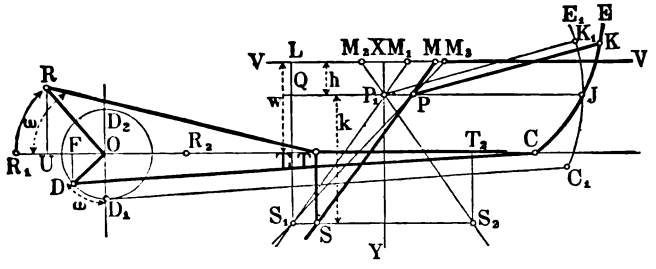

thus into the position $O R_2$, the cross-head will have arrived at the other end of the stroke or at $T_2 S_2$, the link will again occupy its central position, whilst the centre line of the eccentric will have arrived at $O D_2$. The radius rod will thus again occupy the position $K_1 P_1$, and the lever which governs the valve will have now arrived at the position $S_2 M_2$, *i. e.* the valve will have travelled during the supposed movement from right to left as much as the distance $M_1 M_2$. If we bisect $M_1 M_2$ at X, this point marks the central position of the valve; for the movement of the valve must be a symmetrical one, when we imagine that the centre of the valve is directly fastened to the end M of the motion-lever M S. Besides, the straight line $X P_1 Y$ lies in the centre of the stroke of the piston $S_1 S_2$. The distances $M_1 X$ and $M_2 X$ represent thus the movements of the valve from its central position, *when the crank stands at the one of the dead points*. As the two distances $M_1 X$ and $M_2 X$ represent the lead and the outside lap added to it, and the first has to be constant for all grades of expansion, the position of the lever $M_1 S_1$ or $M_2 S_2$ has to remain unaltered, when the end K_1 of the radius rod $K_1 P_1$ is moved up and down in the link, while the crank stands at one of the dead points; the point P_1 has therefore not to alter its position while this raising or lowering of the radius rod takes place. It will be seen at once, that such is the case when the slot in the link is curved to an arc, the radius of which is equal to the length $K_1 P_1$ of the radius rod. It is next most advantageous to put the

Digitized by Google

turning-point J of the link in a line J P_1 parallel to the centre line of the valve-spindle V V.

Ascertaining, by calculation, the movement of the valve during any angular movement of the crank, it will be found that the setting forth of the corresponding formulæ for the movement of the valve is connected with great difficulties; but if we accept a calculation of approximation, the proportions become very simple.

Let us take the eccentricity O D = r (Fig. 34), the radius of the crank be O R = R; the half-length J C of the link = c, the distance J K of the sliding-block K from the centre of the link for any grade of expansion = u. Next let the distance of the point P_1 from the valve-spindle V V at the central position of the link $P_1 X = h$, and the distance of the centre of the guide-box S from the line J Q, which is parallel to the valve-spindle, $P_1 Y = Q S_1 = k$. Let us suppose, finally, an eccentric and radius rod as long as possible.

Theory of the Link-motion by Heusinger von Waldegg.

a. Determination of the Movement of the Valve.

If we start with the position O R_1 of the crank, then the link occupies at that moment the position $C_1 E_1$, the motion-lever the position $S_1 M_1$, and the centre of the valve is removed from its central position as far as $M_1 X$. Now, instead of supposing the crank and the eccentric to travel together through an angle ω, we shall imagine, in order that the matter may be better understood, that they turn separately. If we thus suppose the crank to be at present fixed at O R_1 and turn the eccentricity r in the direction of the arrow through the angle $D_1 O D = \omega$, the point D of the eccentric rod, and therefore also the point of connection C of it with the link, will have moved approximately as much as the distance O F towards the left, and this distance is = $r \sin \omega$. While the point C moves as much as $C C_1 = r \sin \omega$ towards the left, the link arrives at the position C J E, and the sliding-block K_1 advances therefore towards K, so that

$$\frac{K K_1}{J K} = \frac{C C_1}{J C}$$

Digitized by Google

or according to our signification $K K_1 = \frac{u}{c} r \sin \omega$. By the movement of the point K_1 also the other end P_1 of the radius rod will have arrived at P, so that approximately $P P_1 = K K_1 = \frac{u}{c} r \sin \omega$. As now the crank for the present was supposed to be fixed at $O R_1$, therefore the arm $S_1 T_1$ or the guide-box S_1 will not have altered its position; and the motion-lever would have therefore passed, in consequence of the movement of P_1, from the position $S_1 P_1 M_1$ into the position $S_1 P M_3$ and the centre of the valve from M_1 to M_3, if the crank had not turned at the same time also through the angle $R O R_1$. But at first the movement $M_1 M_3$ of the valve might be determined. During the movement of P_1 towards the right, the point P_1 leaves the straight line $P_1 J$, for $M_1 P_1 = M_3 P$; but as this quantity is always very small, it may be supposed approximately that the point P_1 always moves like M_1 in a straight line backwards and forwards, and thus that $P_1 P$ is parallel $M_1 M_2$. Thus follows, according to Fig. 34,

$$\triangle M_1 S_1 M_2 \backsim \triangle P_1 S_1 P, \text{ whence}$$

$$\frac{M_1 M_2}{P P_1} = \frac{M_1 S_1}{P_1 S_1} = \frac{X Y}{P_1 Y},$$

or, according to the given signification and because there was $P P_1 = \frac{u}{c} r \sin \omega$:

$$M_1 M_2 = \frac{h + k}{k} \cdot \frac{u}{c} r \sin \omega. \qquad (73)$$

Fig. 34.

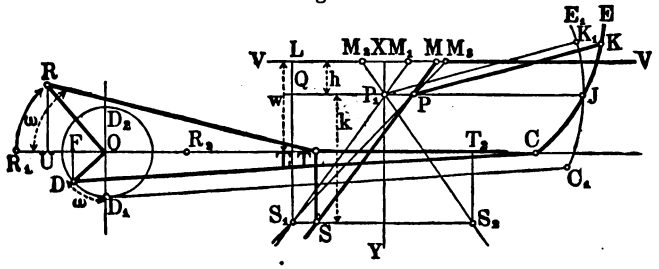

M_3 is, however, not the true position of the centre of the valve; for if the crank is now turned through the angle $R_1 O R = \omega$, the arm

Digitized by Google

$S_1 T_1$ advances to S T, the motion lever moves in the guide-box S, while it (the motion lever) turns round the point P, which is at present supposed to be fixed, and brings the centre of the valve from M_3 to M, *i. e.* to the place where it would have arrived, if the movements of the crank and of the eccentricity had taken place simultaneously. The distance $M M_3$ may now easily be calculated. It is:

$$\triangle M M_3 P \backsim \triangle S P S_1, \text{ therefore}$$

$$M M_3 : S S_1 = M_3 P : A S_1, \text{ or because}$$

$$M_3 P : P S_1 = X P_1 : P_1 Y = h : k$$

$$M M_3 = \frac{h}{k} . S S_1.$$

But $S S_1$ is now nothing else but the movement of the piston for the angular movement ω, thus:

$$S S_1 = T T_1 = U R_1 = R (1 - \cos \omega) \text{ approximately.}$$

The influence of the length of the connecting rod may here be once more neglected, as the quantity $S S_1$ has to be multiplied by the small fraction $\frac{h}{k}$ in order to determine $M M_3$. If we substitute the value of $S S_1$ in the above, it will be:

$$M M_3 = \frac{h}{k} R (1 - \cos \omega). \qquad (74)$$

The valve has thus, as the Figure shows, at the present position O R of the crank moved from the central position as much as M X, and we have:

$$M X = M_1 X + M_1 M_3 - M M_3; \qquad (75)$$

But we have also:

$$\frac{M_1 X}{X P_1} = \frac{Y S_1}{Y P_1} \text{ or because}$$

$$Y S_1 = R \text{ and } Y P_1 = k,$$

$$M_1 X = \frac{h}{k} R.$$

If we substitute this value, as well as the results of equation (73) and (74) in equation (75), we get, after a slight reduction, the move-

Digitized by Google

ment of the valve from the centre of its stroke due to the angular movement ω, thus $M X = \xi$

$$\text{(V)} \qquad \xi = \frac{h}{k} R \cos \omega + \frac{u}{c} \frac{h+k}{k} r \sin \omega.$$

If we put for simplicity

$$\frac{h}{k} R = A \tag{76}$$

and for a certain grade of expansion, thus for a given value of u:

$$\frac{u}{c} \frac{h+k}{k} r = B, \tag{77}$$

the equation for the movement of the valve will be:

$$\xi = A \cos \omega + B \sin \omega. \tag{78}$$

b. On the Curve of Centres.

The abscissa for any point of the curve of centres, or, in other words, for the centre of any valve-circle, is, according to known theses:

$$O B = a = \frac{1}{2} A = \frac{1}{2} \frac{h}{k} R;$$

and the ordinate

$$B C = b = \frac{1}{2} B = \frac{u}{2c} \frac{h+k}{k} r,$$

for the formula for the movement of the valve of the present valve-gear has also the general form

$$\xi = A \cos \omega + B \sin \omega,$$

and the movements of the valve are, therefore, here also represented by chords of circles, which we have called valve-circles.

As the formula for the abscissa does not contain the value of u, all points of the curve of centres have the same abscissa, and it thus follows that the required "curve" of the present valve-gear, as it was in the case of that by Gooch, *is a straight line* $B C_4$ (Fig. 32, p. 110), *which is perpendicular to the centre line of motion* $O X$.

Digitized by Google

Practical Application of the Diagram.

In practice it is only necessary, in order to be able to examine an existing valve-gear of the present system, or to construct a new one, to know of the above investigations—the equation for the movement of the valve.

The equation is:

$$\xi = \frac{h}{k} R \cos \omega + \frac{u}{c} \frac{h+k}{k} r \sin \omega.$$

The different letters have the significations previously given, and only with respect to u have we to add a few words. For the link may be here constructed in such a manner, that at the last grade, thus when the radius rod is quite raised or lowered, the slide-block K is either not so remote from the dead point as the point of connection C of the eccentric rod, or this distance may be larger than C J. In the valve-gears constructed by Heusinger the first case occurs. We shall call, as previously, the distance of the slide-block from the dead point at the last grade c_1, and shall explain everything else with reference to this valve-gear at once by a particular example.

We have chosen for that purpose a valve-gear, as applied by Heusinger von Waldegg to one of his tank-engines of small dimensions. The principal dimensions are:

Crank-radius	R = 0·14^m (5·5″)
Eccentricity	r = 0·032^m (1·28″)
Half-length of the link .. .. J C	c = 0·108^m (4″)
Distance of the last grade of expansion from the dead point of the link, thus .. .. J K	c_1 = 0·081^m (3·18″)
Vertical distance of the point P from the axis of the valve-spindle	h = 0·028^m (1·16″)
Vertical distance of the point P from the centre of the guide-box S ..	k = 0·304^m (12″)
Outside lap	e = 0·011^m (0·43″)
Inside lap	i = 0·002^m (0·07″)

If we suppose next four grades of expansion for the forward gear and four for the backward gear, thus $n = 4$, all questions with

Digitized by Google

respect to the distribution of the steam may easily be answered from these data.

We must first calculate the co-ordinates for the centre of the valve-circle of the last or fourth grade; and we substitute thus in the following formula u for c_1:

$$BO = \frac{1}{2}\,\frac{h}{k}\,R \text{ and } BC = \frac{1}{2}\,\frac{u}{c}\,\frac{h+k}{k}\,r.$$

Substituting in this the given values, there follows:

$$OB = 0{\cdot}00645^m\ (0{\cdot}21'') \text{ and } BC_4 = 0{\cdot}0131^m\ (0{\cdot}59''),$$

and marking these values in Fig. 35, we get the centre C_4 of the valve-circle for the last grade.

This is the whole calculation, for the centres for the valve-circles of the other grades are simply obtained by dividing the ordinate BC_4 into as many parts as there are grades, thus in this case *four*. If we now describe from C_4, C_3, C_2, C_1, and B circles with C_4O, C_3O, &c., &c., as radii; and also from O the lap-circles with the laps e and i as radii, then the diagram is complete, and we may proceed in investigating the distribution of the steam in exactly the same manner as stated in the case of the valve-gears previously described.

Fig. 35.

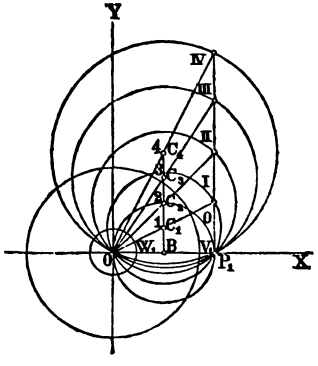

The diagram is exactly the same as that of Gooch's valve-gear. As all valve-circles cut the axis of the abscissa at the same point P_1, the lead P_1V_1 is thus constant for all grades, and that has been the aim of Heusinger. In the valve-gear under examination, the outside lead is equal to $0{\cdot}002^m$ ($0{\cdot}078''$), and the inside one $0{\cdot}011^m$ ($0{\cdot}43''$).

The manner in which we can obtain from the above-given dimensions of the valve-gear information respecting the distribution of the steam, has been sufficiently explained already.

But it is of special importance to determine for certain conditions, certain parts of the valve-gear, as for example, the outside and inside

Digitized by Google

lap, eccentricity, &c. It is almost always found, that in practice in the formula for the movement of the valve

$$\xi = \frac{h}{k} R \cos \omega + \frac{u}{c} \frac{h+k}{k} r \sin \omega,$$

the length R of the crank is known, and thus also the values of h and k (Fig. 34, page 130). It will only be necessary always to make h as small and k as large as possible. Next the vertical distance $L T_1 = \omega$ between the centre lines of the valve-spindle and piston-rod is to be taken as given, and therefore also the half-length of the link, which we may put near enough as $c = C_1 J = T_1 Q = \omega - h$. Besides, for c_1 any value may be chosen, *i. e.* for the distance of the last grade from the dead point J of the link.

The method which has to be followed in the construction of a new valve-gear will be indicated by the following example.

In a valve-gear on Heusinger von Waldegg's system, steam has to enter, at the last grade of expansion, while the piston travels through 0·825 of its stroke, and the exhaustion of the steam has to begin when the piston has still to travel through 0·045 of its stroke. There is given:

$R = 0{\cdot}14^m$ (5·5″)
$c = 0{\cdot}108^m$ (4″)
$c_1 = 0{\cdot}081^m$ (3·18″)
$h = 0{\cdot}028^m$ (1·1″)
$k = 0{\cdot}304^m$ (12″)
the outside lead $= 0{\cdot}002^m$ (0·078″)

The eccentricity r as well as the outside and inside lap are to be determined, and then the distribution of the steam for all other grades of expansion is to be examined, there being four grades for the forward as well as for the backward gear.

Draw the two axes O M and $O P_2$ (Fig. 36) and describe to any scale the crank-pin circle $M R R_1$. If we suppose the piston to travel on the diameter from M to N, the admission of the steam has then to cease at M_1, so that $M M_1 = 0{\cdot}825 . M N$. Draw the perpendicular $M_1 R_1$, meeting the crank-pin circle at R_1 and connect R_1 with O by the straight line $O R_1$; this is then the position of the piston at the beginning of the expansion. Calculate next

$$A = \frac{h}{k} R = 0{\cdot}0129 = O P_1.$$

Digitized by Google

If we mark the value of the outside lead $V_1 P_1 = 0{\cdot}002^m$ $(0{\cdot}07'')$ from P_1 towards O, then $O V_1 = e$ is at once the required outside lap, which is found by measurement to be $e = 0{\cdot}011^m$ $(0{\cdot}43'')$ if we consider that Figure 36 is drawn full-size.

Fig. 36.

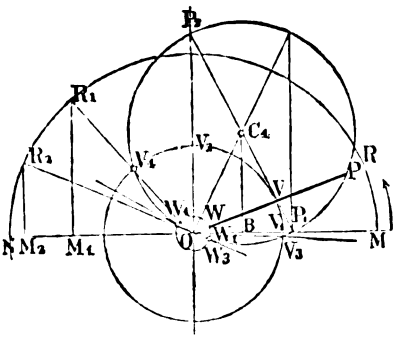

Describe now from O with the lap e as a radius, the circle $V_1 V_4$; it intersects the position $O R_1$ of the crank at V_4; drawing now through the three points V_4 O and P_1 a circle, we get the valve-circle corresponding to the 4th grade. The distance $B C_4$ of its centre from the axis O M is according to what has been stated previously

$$b = \frac{1}{2} B = \frac{1}{2} \frac{c_1}{c} \frac{h + k}{k} r.$$

The distance $b = B C_4$ is to be measured; for the present case $b = 0{\cdot}013^m$ $(0{\cdot}57'')$, therefore follows from the last equation

$$r = \frac{c}{c_1} \frac{k}{k + h} 2 b.$$

Substituting on the right hand side the known values, the required eccentricity:

$$r = 0{\cdot}032^m \ (1{\cdot}25'').$$

In order to determine the *inside* lap i, it is to be observed, that the exhaustion of the steam has to *begin*, when the piston has still to travel through 0·045 of its stroke. Make therefore $N M_2 = 0{\cdot}045$ M N, erect at M_2 the perpendicular $M_2 R_2$ and produce $O R_2$ beyond O to the point of intersection W_3 with the valve-circle. $O W_3$ is the required inside lap, which is according to measurement

$$O W_3 = i = 0{\cdot}002^m \ (0{\cdot}07'').$$

Describing also with i the circle $W_3 W_4$ and next the other valve-circles, it will then be easy, according to the above, to understand at once the distribution of the steam for all grades of expansion.

Digitized by Google

The examination of the diagram of Heusinger's valve-gear shows that the aim, to produce a constant lead, is completely reached, but that the valve-gear, in respect to the distribution of the steam, is equal to those previously examined. Heusinger's construction is, without doubt, very ingenious, but too complicated; that which has been said at the end of the investigation of the valve-gear by Gooch, *viz.* that the constant lead is purchased at too high a price, is also true for this system, even in a higher degree.

CHAPTER V.

Link-motion by Pius Fink.

Description of the valve-gear.

This valve-gear, which is represented by Fig. 16, Plate IV., and for which the inventor took a patent as long ago as April, 1857, is the most simple link-motion in existence; and has already often been applied. O is the driving-axle, O R the crank, and D an eccentric, which is fastened with an angle of advance of 90°, and the sheave of which is directly and immovably fastened to the link C C. A lever G Q, which swings round the fixed point G, is coupled to this link at the point Q, so that the point Q moves backwards and forwards almost on the centre-line of the stroke O B, whilst simultaneously with the turning of the axle oscillating movements of the link take place round this point.

The radius-rod M B_1, which is connected at B_1 with the valve-spindle, is moved up and down in the link C C by means of the bell-crank lever E K L, to which it is connected by the lifting-link E T. The engine runs then either in the one or in the other direction, according to whether the sliding-block M is placed below or above the dead point J of the link; and, besides, the distance J M governs the grade of expansion.

This valve-gear has especially been used for stationary engines, which have to work with variable expansion, but which have always to run in the same direction. For such cases only the one half of the link is constructed (compare Fig. 17, Plate IV.), and the sliding-

Digitized by Google

block M is then fixed at any required point M of the link by means of a screw or cotter. This difference, *viz.* whether the shifting of the radius rod is effected through a bell-crank by means of the suspension rod E T, as in Fig. 16, or whether the point M is fixed in the link by a screw, is to be taken in consideration during the theoretical investigation, as it will be the case in the following; for the movement of the valve will be different in the two cases, the slide-block M moving up and down in the link between certain limits in the first arrangement.

Theory of the Link-motion by Pius Fink.

a. Determination of the Movement of the Valve.

We shall at first investigate the arrangement shown in Fig. 16, Plate IV., and shall suppose the radius rod to be moved up and down by means of a bell-crank lever. If in Fig. 37, O B is the direction of the valve face and O Z the centre line of the cylinder, then the crank stands at the position $O R_0$ on a dead point, and $O D_0$ indicates at that moment the line of the eccentricity r. The angle of advance is thus $Y O D_0 = 90°$; and if the crank is moved in the direction of the arrow through the angle ω, the eccentricity will arrive at the position O D, and all other parts of the valve-gear are represented in the Figure as corresponding with this position.

Fig. 37.

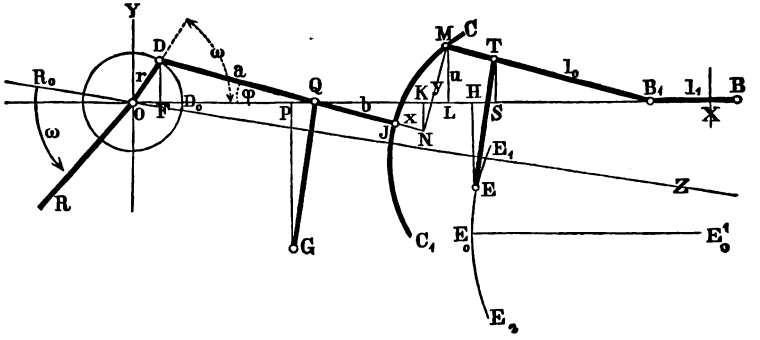

We will suppose that the point Q, which is situated on the con-

Digitized by Google

necting line D J between the centre D of the eccentric and the dead point J of the link, moves backwards and forwards exactly on the centre line of motion O B; at least we may neglect the variations, which will be caused, if we take the oscillating lever Q G very long and its fulcrum G so that the chord of the arc which the point Q describes is parallel to O B. Besides this we shall in the following calculations call the two parts of D J, D Q = a and Q J = b, and shall suppose the inclination of this line towards the centre line of motion, corresponding to the angular movement ω to be D Q O = ϕ. We shall again call the whole length of link C C_1 = 2 c and shall suppose the link to be an arc, the radius of which is taken for the present equal to any length ρ. Let also the co-ordinates of the point M, which represents the position of the sliding-block for the corresponding position of the crank, be J N = x and N M = y, if we apply the equation of the circle to the dead point J as point of commencement, and if we suppose the axis of the abscissa to coincide with D J. Next, let the length of the radius rod B_1 M be = l and the length of the valve-spindle, measured to the centre of the valve, B_1 B = l_1; if the suspension rod E T is now long and if its fixed point E is chosen correctly, the point T and thus also the end M of the radius rod, *i.e.* the sliding-block in the link, will be moved almost parallel to the centre line of motion O B, and the normal distance M L = u will be therefore a constant one for a certain position of the bell-crank lever E K L (Fig. 16, Plate IV.). In all valve-gears already examined we made the distance of the slide-block from the dead point of the link, for instance J M = u; but in the present case it is more correct, to make the distance M L = u, because we show thus also in the formulæ the influence of the movements of the slide-block M in the link upon the movements of the valve.

We have now first to determine the distance of the centre of the valve B from the centre C of the axle for the position of the crank R_0 O R = ω. If we drop (Fig. 37) from the points D and N on O B the perpendiculars D F and N K, then we have, as will be seen from the Figure :

$$O B = O F + F Q + Q K + K L + L B_1 + B_1 B,$$

Digitized by Google

or, as will be seen at once:

$$O\,B = r\cos\omega + a\cos\varphi + (b + x)\cos\varphi + y\sin\varphi + \sqrt{l^2 - u^2} + l_1. \qquad (79)$$

Besides there exists the relation:

$$y\cos\varphi = u + (b + x)\sin\varphi; \qquad (80)$$

and next, as the link has to be curved to radius ρ:

$$y^2 = x(2\rho - x)$$

or, when the radius ρ is proportionately large, and the arc of the link thus flat, we have more simply:

$$y^2 = 2\rho x. \qquad (81)$$

Finally, we get from the calculation of the length D F:

$$r\sin\omega = a\sin\varphi. \qquad (82)$$

The four equations above given comprise the entire theory of the present valve-motion; for if the quantities x, y, and φ, are eliminated by the three last equations in equation (79), O B appears only as a function of ω and u, and the ascertaining of this relation is just the object of the investigation. The exact calculation would lead to very complicated formulæ, but we may with sufficient correctness proceed approximately as follows. Next we may in equation (79), when the eccentric rod is long and the link proportionately short, *i.e.* when l is large and u small, write for the quantity under the root:

$$\sqrt{l^2 - u^2} = l - \frac{u^2}{2l}.$$

Substituting also in quation (79) the value of y, obtained from equation (80), the former may be given after a few reductions as:

$$O\,B = r\cos\omega + a\cos\varphi + \frac{b + u\sin\varphi}{\cos\varphi} + \frac{x}{\cos\varphi} + l + l_1 - \frac{u^2}{2l}.$$

The value of x may be calculated from equation (81), and as this value is of itself very small, we can take the value of y from equation (80), by putting there $x = 0$; there follows thus from (80):

$$y = \frac{u + b\sin\varphi}{\cos\varphi}$$

Digitized by Google

and then from (81)

$$x = \frac{(u + b \sin \varphi)^2}{2 \rho \cos^2 \varphi}$$

and by substituting in the last equation for O B:

$$O B = r \cos \omega + a \cos \varphi + \frac{b + u \sin \varphi}{\cos \varphi} + \frac{(u + b \sin \varphi)^2}{2 \rho \cos^3 \varphi} + l + l_1 - \frac{u^2}{2 l}.$$

Finally there is the angle φ to be expressed by ω; from equation (82) follows:

$$\sin \varphi = \frac{r}{a} \sin \omega$$

$$\cos \varphi = \sqrt{1 - \frac{r^2}{a^2} \sin^2 \omega},$$

or when a is large enough in proportion to r and the root is replaced by a progression, in which the powers higher than second ones are neglected:

$$\cos \varphi = 1 - \frac{r^2}{2 a^2} \sin^2 \omega,$$

and thus follows also approximately:

$$\frac{1}{\cos \varphi} = 1 + \frac{r^2}{2 a^2} \sin^2 \omega \text{ and } \frac{1}{\cos^2 \varphi} = 1 + 3 \cdot \frac{r^2}{2 a^2} \sin^2 \omega.$$

Using these values for the last equation for O B and neglecting all quantities which contain $\frac{r}{a} \sin \omega$ in a higher than the second power, we get finally:

$$O B = r \cos \omega + \frac{r u}{a} \left(1 + \frac{b}{\rho}\right) \sin \omega + a + b + l + l_1 + \frac{u^2}{2 \rho} - \frac{u^2}{2 l} - \frac{1}{2} \frac{r^2}{a^2} \left(a - b - \frac{b^2}{\rho} - 3 \frac{u^2}{2 \rho}\right) \sin^2 \omega. \quad (83)$$

According to this formula the distance of the valve-centre from the centre O of the axle may be calculated for a certain position u of the eccentric rod and for any position ω of the crank.

If the crank stands at one of the dead points, and if thus $\omega = 0$, this distance will be then:

$$r + a + b + l + l_1 + \frac{u^2}{2 \rho} - \frac{u^2}{2 l}.$$

Digitized by Google

If the crank stands at the other dead point, and if thus $\omega = 180°$, this distance is:

$$-r + a + b + l + l_1 + \frac{u^2}{2\rho} - \frac{u^2}{2l}.$$

The mean of the two values gives, as the valve is to be adjusted to equal lead, the distance O X of the centre of motion X of the valve from the centre O of the axle. This is thus:

$$O X = a + b + l + l_1 + \frac{u^2}{2\rho} - \frac{u^2}{2l}.$$

But the centre X has to keep invariably the same position for each position of the eccentric rod; O X must be therefore independent of u, and this is the case if $\rho = l$; hence follows the rule:

In Fink's valve-gear the link must be curved to an arc, the radius of which is equal to the length of the radius rod $B_1 M = l$.

Putting now into the equation for O X, as well as in equation (83) $\rho = l$, we get finally according to the formula

$$\xi = O B - O X$$

the movement of the valve:

$$\xi = r \cos\omega + \frac{r u}{a}\left(1 + \frac{b}{l}\right)\sin\omega - \frac{1}{2}\frac{r^2}{a^2}\left(a - b - \frac{b^2}{l} - 3\frac{u^2}{2l}\right)\sin^2\omega. \quad (84)$$

If we may neglect the last quantity, which represents the "missing quantity," on account of its very small value, as is always possible for a good distribution of the steam, we get the simple equation

$$\xi = r \cos\omega + \frac{r u}{a}\left(1 + \frac{b}{l}\right)\sin\omega, \quad (85)$$

this being the same general formula as has been obtained for all valve-motions previously examined.

The results above obtained are based upon the arrangement shown in Fig. 16, Plate VI., or Fig. 37, page 138; if however, the sliding-block M is *not* kept by means of the rod E T parallel to the centre line of motion O B, and is thus not forced to move up and down in the link, but is fixed in the link at the point M by a screw,

Digitized by Google

the results above obtained cannot be taken as exactly correct; but there are no difficulties in transforming the formulæ at once, so that they may correspond to the altered conditions. M L = u is then no longer constant for a certain degree of expansion (Fig. 37), but this is now the case with the length J M, which may be represented correctly enough by y. But according to equation (80) we have,

$$u = y \cos \varphi - (b + x) \sin \varphi$$

and if we put here, as above,

$$x = \frac{y^2}{2\rho} = \frac{y^2}{2l}$$

as well as

$$\sin \varphi = \frac{r}{a} \sin \omega \text{ and } \cos \varphi = 1 - \frac{1}{2} \frac{r^2}{a^2} \sin^2 \omega,$$

then follows:

$$\frac{r u}{a} \sin \omega = \frac{r y}{a} \sin \omega - \left(b + \frac{y^2}{2l}\right) \frac{r^2}{a^2} \sin^2 \omega$$

as well as

$$\frac{r^2 u^2}{a^2} \sin^2 \omega = \frac{r^2 y^2}{a^2} \sin^2 \omega.$$

Using these two equations for eliminating from equation (84) the value of u, we get after a few reductions for the present case:

$$\xi = r \cos \omega + \frac{r y}{a} \left(1 + \frac{b}{l}\right) \sin \omega - \frac{1}{2} \frac{r^2}{a^2} \left(a + b + \frac{b^2}{l} - \frac{y^2}{2l}\right) \sin^2 \omega; \quad (86)$$

this formula differs from equation (84) only in the "missing quantity;" if this is also in this case small enough, equation (85) is likewise obtained, with the only difference that here u represents the distance between the sliding-block M and the dead point J of the link, whilst in the former case u represented the normal distance of the sliding-block M from the centre of motion O B, *i. e.* the distance M L.

b. On the Curve of Centres.

If Fink's valve-motion is such that the "missing quantity" may be neglected, then, according to what was said on examining the curves of centres of the valve-motions already explained, the co-

Digitized by Google

ordinates of the centre of the valve-circle, which corresponds with the position u of the eccentric rod, are obtained according to the formulæ:

$$\frac{1}{2} A = \frac{1}{2} r$$

$$\frac{1}{2} B = \frac{1}{2} \frac{ru}{a} \left(1 + \frac{b}{l}\right).$$

Now, as $\frac{1}{2} A$ is constant for all valve-circles, their centres are situated above each other; the "curve" of centres is therefore, as in the valve-motions of Gooch and Heusinger von Waldegg, a *straight line*, which is perpendicular to the centre line of motion. A further investigation of the present question would be therefore only a repetition of that which has already been given at the valve-motions last examined.

c. On the Suspension of the Link and of the Radius Rod.

We shall first speak respecting the suspension of the link. This is effected by means of the link G Q, which swings round the fixed point G (Fig. 37). The theoretical investigations respecting the movement of the valve supposed that the point Q moved backwards and forwards on the centre line of motion O B; in order to fulfil this condition as nearly as possible, the link G Q must be made as long as possible, and the centre G must be situated so that the chord of the arc in which the point Q really moves, is parallel to the centre line of motion. The abscissa O P of the centre G is obtained by this last requirement. We find for any position of the crank ω the distance O Q (Fig. 37).

$$O Q = O F + F Q = r \cos \omega + a \cos \varphi.$$

Now if the crank stands at the one of its dead points, so that $\omega = 0$, therefore also $\varphi = 0$, and the corresponding value of O Q is

$$r + a.$$

If the crank, however, stands at the second dead point, so that $\omega = 180$, then again $\varphi = 0$, and it follows that the value of O Q is

$$- r + a.$$

Digitized by Google

The mean of these two values is simply a. The point P, below which the fixed centre G must be placed at the distance G P, is thus distant from the centre O of the axle as much as $O P = D Q = a$.

Now, next with reference to the suspension of the radius rod, the problem is to keep the sliding-block M (Fig. 37) at a constant distance

Fig. 37.

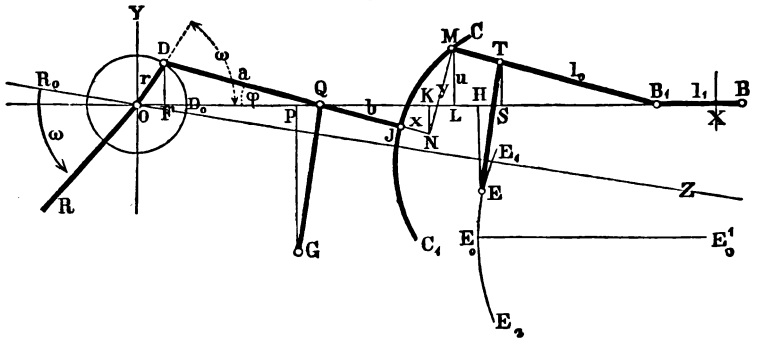

$M L = u$ from the centre line of motion O B. This condition is best fulfilled when the point T, at which the suspension-rod E T is fastened to the radius-rod, moves in an arc, the chord of which is parallel to the centre line of motion, and when the radius of this arc, *i. e.* the length l_2 of the arm E T, is taken as large as possible. The abscissa O S of the point T for a certain position u of the sliding-block M, and any angular movement ω is now easily determined, as follows:

We have $O S = O B - B B_1 - B_1 S$.
And $B_1 S : B_1 T = B_1 L : B_1 M$.

If we put $B_1 T = l_0$, and, as before, the length of the radius rod $B_1 M = l$, the above proportion gives:

$$B_1 S = \frac{l_0}{l} \sqrt{l^2 - u^2};$$

or approximately

$$B_1 S = l_0 - \frac{l_0 u^2}{2 l^2}.$$

Putting also the length of the valve-spindle $B_1 B = l_1$ (measured as far as the centre of the valve), and using in the equation for O S the

Digitized by Google

equation (83), neglecting there the last quantity (the "missing quantity"), and substituting l for ρ, there follows:

$$O S = r \cos \omega + \frac{r u}{a}\left(1 + \frac{b}{l}\right) \sin \omega + a + b + l - l_0 + \frac{l_0 u^2}{2 l^2}.$$

If the crank stands at the one of the dead points, so that $\omega = 0$, the corresponding value of O S is:

$$r + a + b + l - l_0 + \frac{l_0 u^2}{2 l^2}.$$

If the crank is at the other dead point, so that $\omega = 180°$, the value of O S becomes:

$$- r + a + b + l - l_0 + \frac{l_0 u^2}{2 l^2}.$$

The mean of these two expressions gives that central position of the swinging point T, for which the arm E T has to be vertical; and the abscissa O H $= x$ of the point E for the corresponding position u of the sliding-block M is therefore:

$$O H = x = a + b + l - l_0 + \frac{l_0 u^2}{2 l^2}. \qquad (87)$$

The ordinate H E $= y$ of this point is, however,

$$H E = E T - S T.$$

Substituting l_2 for the length of the arm E T, and considering the proportion:

$$S T : M L = B_1 T : B_1 M \text{ or}$$
$$S T : u = l_0 : l,$$

we get also:

$$H E = y = l_2 - \frac{l_0}{l} u. \qquad (88)$$

The co-ordinates x and y of the point E are now calculated by the aid of the two equations (87) and (88) for every position u of the sliding block; and the course of the curve $E_1 E E_2$, in which this point E must move up and down, so that the guiding of the radius-rod may be as perfect as possible is thus easily determined.

For the dead point of the link, *i. e.* for $u = 0$, this turning-point

Digitized by Google

falls at E_0, and the co-ordinates $x = x_0$ and $y = y_0$ for this point are thus

$$x_0 = a + b + l - l_2 \tag{89}$$

$$y_0 = l_2, \tag{90}$$

The position of this point E_0 may now easily be ascertained. Combining next equations (87) and (88) we get:

$$x - x_0 = \frac{l_0 u^2}{2 l^2}$$

$$y_0 - y = \frac{l_0}{l} u,$$

and thus by eliminating u the equation of the curve $E_1 E_0 E_2$

$$(y_0 - y)^2 = 2 l_0 (x - x),$$

and this is the equation of a parabola of the parameter $2 l_0$, having its chief axis $E_0 E_0^1$ parallel to the centre line of motion O B, and which (for $2 l_0$ will always be large) can again be replaced by an arc of the radius l_0.

We get thus, with reference to the suspension of the radius rod the following practical rule:

Chose the length l_2 of the suspension rod E T as long as possible, calculate the co-ordinates of the point E_0 according to the equations (89) and (90), and draw through this point the line $E_0 E_0^1$ parallel to the centre line of motion O B. From E_0^1 describe now with the length $B_1 T = l_0$ as radius, a circle $E_1 E_0 E_2$, which passes through E_0, and which is then the arc in which the turning-point E of the suspension-link has to be moved up and down, in order to produce a variable expansion. The valve-gears on this system, as executed at the present time (compare Fig. 16, Pl. IV.), are not constructed according to this rule; the arm E K of the bell-crank lever E K L is moreover taken shorter than the part $B_1 T$ of the radius rod. But a simple alteration in construction would easily effect the required movement of the point E.

Digitized by Google

Practical Application of the Diagram.

If we neglect the "missing quantity," the movement of the valve in this valve-gear is according to equations (84) and (86):

$$\xi = r \cos \omega + \frac{r u}{a}\left(1 + \frac{b}{l}\right) \sin \omega,$$

the different letters having the same signification as given on p. 139. If, therefore, the value of the factors of *cos.* ω and *sin* ω is calculated, the valve-circles for different values of u may be drawn; and, on account of u appearing in the equation, a diagram for this valve-gear is obtained, which is of the same form as that of the valve-gear by Gooch (p. 110) and that by Heusinger von Waldegg (p. 134). It seems, therefore, to be unnecessary to explain the application of the above formula and the construction of the diagram by a special example, as we should simply have to repeat what has been already stated. But special peculiarities of Fink's valve-gear may be shown here by comparing it with those previously examined.

We get for the two methods of moving the sliding-block in the link, as represented in Figs. 16 and 17, Plate IV., two different formulæ (84) and (86) for the movement of the valve, but which only differed by the "missing quantity" and by the circumstance that the value u represents in the one formula the distance of the sliding-block M from the centre line of motion (M L, Fig. 37), and in the other one the distance of the block M from the dead point J of the link (with sufficient exactness the part M N in Fig. 37); the sliding-block moves, in the first case, for a certain distance up and down in the link, whilst it is fixed in the other case. But the fact that the same formula for the movement of the valve under a different signification of u is obtained in both arrangements by neglecting the "*missing quantity*," leads to the conclusion that the two parts M L and M N (Fig. 37) generally ought not to differ much from each other. But this condition is fulfilled, as an examination of the Figure shows, if the eccentricity O D $= r$ is taken small, and the distance D Q $= a$ as large as possible. Even the "missing quantities" indicate that the proportion $r : a$ has to be as small as possible. But a further examination of the Figure leads to the required condition in the rule, namely, to chose the part Q J $= b$ as small as possible; it seems thus

Digitized by Google

the best, for it is easy to do, to chose the value $b = 0$, *i. e.* to connect the link with the oscillating lever G Q at the dead point J. We may add to these rules the condition already stated during the evolution of the formulæ, namely, to choose the length of the radius rod, *i. e.* the radius of the link, as large as possible.

Supposing, now, the above-given conditions to be fulfilled as far as possible for a certain case, the question may arise whether Fink's valve-gear, on account of its great simplicity, is able to replace, especially on locomotives, the valve-gears by Stephenson, Gooch, and Allan.

In order to answer this question, the problem may be solved to construct a valve-gear on Fink's system, which has to produce *exactly the same* distribution of the steam as the valve-gear by Gooch, chosen in the problem on p. 110.

We found there for the last (fourth) grade of expansion, *i. e.* for $u = c$, and for the dimensions given in that problem, the co-ordinates of the valve-circle (Fig. 38)

$$O B = 0{\cdot}014^{m} (0{\cdot}55'') \text{ and } B C_4 = 0{\cdot}027^{m} (1{\cdot}06'').$$

Let there be now for the supposed valve-gear on Fink's system: $b = 0$ and the radius rod in its extreme position, thus $u = c$ (c representing the half-length of the link), then we must have (if for this valve-gear the diagram Fig. 38 be correct) according to the equation

$$\xi = A \cos \omega + B \sin \omega = r \cos \omega + \frac{r u}{a} \sin \omega$$

and the known theses:

$$O B = \frac{1}{2} A = \frac{1}{2} r \text{ and } B C_4 = \frac{1}{2} B = \frac{1}{2} \frac{r c}{a}$$

or it would be for the given numerical values:

$$r = 0{\cdot}028^{m} (1{\cdot}1'') \text{ and } \frac{c}{a} = 1{\cdot}93.$$

Thus it follows, that the full length of the link $2c$ in Fink's valve-gear must in the present case be nearly *four times* the length $D Q = a$; the same distribution of the steam could, therefore, only be produced by a *very* long link, as the length a had to be taken as large as possible; but the supposition of a long link contradicts again the supposition of the above evolution of the chief formulæ, in

Digitized by Google

which the distance u, and thus also c, had to be supposed to be small in proportion to the length of the radius rod l. These remarks are already sufficient to show that Fink's valve-gear is only applicable for smaller admissions to the cylinder, and high expansion, and that it is therefore inferior to that by Stephenson, Gooch, and Allan.

Fig. 38.

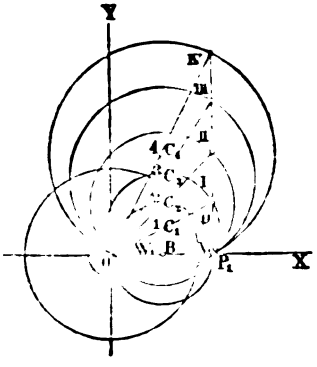

But also the "missing quantities" of the formulæ (84) and (86) signify that Fink's valve-gear fulfils the conditions required for a good valve-gear less than the other valve-gears. Practice has shown by a closer examination that the "missing quantity" in Fink's valve-gear has proportionally a greater influence; and that more disadvantageous differences from the correct movement of the valve thus appear.

In the arrangement with the oscillating sliding-block (Fig. 16, Plate IV.) we have the "missing quantity" according to formula (84):

$$-\frac{1}{2}\frac{r^2}{a^2}\left(a-b-\frac{b^2}{l}-3\,\frac{u^2}{2\,l}\right)\sin^2\omega.$$

The same quantity is for the other arrangement with fixed sliding-block (Fig. 17, Plate IV.) according to formula (86):

$$-\frac{1}{2}\frac{r^2}{a^2}\left(a+b+\frac{b^2}{l}-\frac{y^2}{2\,l}\right)\sin^2\omega.$$

The "missing quantity" varies with the angular movement ω; it is *nil* only for $\omega = 0$ and 180°, *i. e.* when the crank passes through the dead points; it is, however, greatest for $\omega = 90°$ and 270°, and that is for the present valve-gear especially unfavourable; as this valve-gear will be used, as already stated, only for high expansion, *i. e.* for smaller admissions to the cylinder, and the "missing quantity" will just exercise its greatest influence at those angular movements, which generally will correspond nearly with the beginning of the

Digitized by Google

expansion, thus just at the moments at which the variations of the movement of the valve ought to be avoided.

The valve-gears by Stephenson, Gooch, and Allan show more favourable results in this respect. The "missing quantity" for these three constructions was of the equal form:

$$+ \frac{r^2}{2l} \left(cos\ 2\ \delta\ sin\ \omega \pm \frac{u}{c}\ sin\ 2\ \delta\ cos\ \omega \right) sin\ \omega .$$

(Compare pp. 64, 102, and 119.)

This value in these cases becomes *nil* not only for two, but for four positions of the crank, thus not only for $\omega = 0°$ and 180°, but also for the angles, which are obtained by the formula

$$tang.\ \omega = \mp \frac{u}{c}\ tang.\ 2\ \delta ;$$

especially for open rods, and at the highest grade of expansion, *i. e.* for $u = c$, we get $\omega = 180 - 2\,\delta$ and $360 - 2\,\delta$.

With reference to ω we get by differentiation of the "missing quantity" for the calculation of the angular movement, at which the quantity is a maximum, the formula:

$$tang.\ 2\ \omega = \pm \frac{u}{c}\ tang.\ 2\ \delta ,$$

which gives four values. The "missing quantity" becomes a maximum for open rods (upper sign) and the highest grade of expansion for the angles:

$$\omega = 90 - \delta ;\quad 270 - \delta ;\ 180 - \delta ;\quad 360 - \delta :$$

The greatest variation thus takes place when the valve is at the greatest distance from the centre of its stroke, and also when it passes through the centre of its motion; but these are the positions at which the variations evidently influence the distribution of the steam least.

All these observations show that Fink's valve-gear is most decidedly inferior to the other valve-gears, and that it scarcely can be applied to locomotives. It might, however, be applied in many cases with advantage, as has been already done, to stationary engines on account of its great simplicity.

Digitized by Google

APPENDIX TO FIRST PART.

On the Counter-effect of the Steam in Engines with Reversing-Gear.

All the investigations which have been already made on the distribution of the steam by link-motions, started always with the supposition that the valve-gear was, during the forward course of the engine, worked also in fore-gear, and that the valve-gear was acting in a corresponding manner during the backward course; in other words, that the power of the steam acted in the cylinder, as for example, of a locomotive, so as to cause a progressing motion, or relatively an acceleration of the motion.

But one case, known under the name of "counter-effect of the steam," and which may be applied to all engines which are provided with a reversing gear, is now of special interest; we shall therefore in the following say a few words about this case, as our diagram will explain it without requiring any further alterations or additions. The proposition which Lechatelier has lately made, to use counter-pressure of steam as a break for stopping railway trains, has given to this question a greater importance.

If we suppose a locomotive to be running at a high speed, and the valve-motion suddenly reversed, so that the valve-gear works in a reversed manner, thus for example, so that the valve-gear distributes the steam during the forward course of the engine in such manner as would cause the engine to run backwards on a new start being made, very peculiar effects will evidently occur. This much will be seen at once without any further examination, that in this case the speed of the locomotive with the train will be diminished, and that the steam will act against the piston. In order to explain the effects which occur in this case, we will suppose a locomotive with a valve-gear on Stephenson's system: the chief positions of the piston for such valve-gear for the different (4) grades of expansion being represented by the upper part of the Figs. 8 and 10, Plate II., whilst Fig. 8 represents the valve-gear with open rods, and Fig. 10 that for crossed ones. Suppose now the engine to be running forwards, the valve-gear to be at first in fore-gear, and the piston to be travelling in the direction from the right to the

Digitized by Google

left, as indicated by the arrow (Fig. 8 to 10), the four positions of the piston *a*, *b*, *c*, *d*, correspond then, according to that which has been already stated, with the following occurrences:

a Beginning of the expansion, right hand;
b „ „ compression, left hand;
c „ „ release of the steam, right hand;
d „ „ admission of the steam, left hand.

But the representation may become clearer by the signification of the distances travelled by the piston; the occurrences on the *one*, the *right-hand* side are:

Distance H *a* admission of the steam (admission);
„ *a c* expansion of the steam;
„ *c* K release of the steam (exhaustion in front).

But the occurrences on the *other*, the *left-hand* side are:

Distance H *b* release of the steam;
„ *b d* compression of the steam;
„ *d* K admission of the steam (pre-admission).

It is now easy through these values, which have been obtained from the diagram, to imagine the corresponding indicator diagram, and to conclude upon the work performed by the steam.

Let us now pass on to investigate the *counter-effect of the steam*, and let us thus suppose that the engine runs forwards, whilst the valve-gear at one of the four grades of expansion is in *back-gear*, *the succession of the four chief positions of the piston will be then simply reversed*, or the arrow, which indicates in Figs. 8 and 10 the course of the piston, must be drawn in the opposite direction.

If we thus suppose the piston to travel from *the right to the left*, from K towards H (Figs. 8 and 10, Plate II.), the four chief positions of the piston will then correspond with the following occurrences:

d Beginning of the expansion, left hand;
c „ „ compression, right hand;
b „ „ exhaustion, left hand;
a „ „ admission of the steam, right hand;

or if we choose again the *distances travelled by the piston:*

Occurrences on the *left-hand* side:

Distance K *d* admission of the steam;
„ *d b* expansion of the steam;
„ *b* H exhaustion of the steam (release in front).

Digitized by Google

Occurrences on the *right-hand* side of the piston:

Distance K *c* exhaustion of the steam (more correctly, connection of the cylinder space with the exhaust port);
„ *c a* compression of the steam;
„ *a* H admission of the steam (admission in front).

It is thus easy to get an idea of the effect of the steam in the cylinder and to imagine the corresponding indicator diagram. If we examine the occurrences on the left-hand side more minutely, we shall find that fresh steam enters into the cylinder whilst the piston travels the distance K *d*, which is especially very short at the last grade. At *d* the cutting-off, and consequently the expansion, begins, this lasting until the piston arrives at *b*; the distance *d b*, during which expansion takes place, is now so large in proportion to the distance K *d*, during which admission of the steam takes place, especially at the farthest grade of expansion, that the pressure of the steam in the cylinder generally sinks almost to or below the atmospheric pressure. The exhaust-port, which we suppose to communicate for the present directly with the open air, opens when the piston has arrived at *b*. If now the pressure of the steam in the cylinder is at that moment below that of the atmosphere, a compensation will take place and the outside atmospheric air will enter the cylinder (no steam is therefore admitted); but if the pressure of the steam in the cylinder has not sunk, in consequence of the expansion, to or below the atmospheric pressure, then so much steam escapes at the moment of the opening of the exhaust-port, that the pressure of the remaining steam is equal to that of the atmosphere.

The piston, when it has travelled the distance *b* H, has reached the end of its stroke, and the outside atmospheric air is drawn in during the whole distance without interruption through the common exhaust-port, so that when the piston has arrived at *b*, the whole cylinder is filled by the atmospheric air and the small volume of steam which at first had entered while the piston travelled the distance K *d*. Exactly the same occurrences will also take place on the right-hand side of the piston, when it again has returned to the position K after it has travelled through the distance H K. Let us suppose now that the piston has returned to the point K, and let us follow it again during its travel from the left to the right, but this time direct our attention to the occurrences which take place on the *right-hand* side (Figs. 8 and 10, Plate II.). The whole space of the cylinder on the right-hand side is filled with atmospheric air and a little steam. The exhaust-port is still open for the proportionately short distance K *c*, and a small portion of the air will thus be again driven out, whilst the remainder will be slightly compressed; but the exhaust-port shuts when the piston arrives at *c*, and the compression thus begins here, and lasts until the piston occupies the position *a*.

Digitized by Google

The port for the admission of the steam opens at *a* and remains open during the remaining distance *a* H of the stroke of the piston. The steam from the boiler will thus mix at *a* with the compressed air, and the whole mass of air and steam will now be pressed into the boiler, when nearly the full pressure in the boiler is to be overcome. It will thus be seen, that the steam-engines of a locomotive act under the counter-effect of the steam no longer as steam-cylinders, but as "air-pumps;" they are driven by the work, which exists under the form of *vis viva* in a moving train, and nearly a full volume of atmospheric air is drawn in by each cylinder at each stroke of the piston, and then compressed and driven into the boiler; four volumes of air will therefore enter the boiler of a locomotive at every revolution of the driving wheels.

It is thus easy to understand that the counter-effect of the steam in locomotives produces a quick raising of the pressure of the steam in the boiler; but that is but a minor reason why the counter-effect of the steam should be applied for suddenly stopping of trains only in exceptional cases; for another disadvantage of a more serious character is to be met with.

The exhaust-port opens in locomotives, as is known, not directly into the open air, but communicates through the exhaust-pipe with the interior of the smoke-box. Whilst the cylinders are now drawing in the air, they will thus not be filled with pure air, but with the gases of combustion from the smoke-box, which have not only a very high temperature of 400°, 500°, and upwards, but which also carry with them a great many unconsumed parts of the fuel. The disadvantageous influence which the practice of using the counter-pressure of the steam will have upon the engine and boiler of a locomotive will thus be at once understood. Nevertheless, engineers have always had sufficient reason to regret that it should be prohibited to the driver to apply this simple and powerful plan of stopping trains, and as, moreover, the retarding by means of friction-brakes is to be considered, also theoretically, quite as imperfect a practice, for the full *vis viva* of the trains is entirely destroyed by the diminution of velocity.

It is not surprising that under such circumstances the proposition of Lechatelier soon met with great approval and application (at first especially in France and Switzerland). According to this proposition the exhaust-pipe is closed when the reversal is effected, and the exhaust-port is connected by a communicating pipe with the steam and water space of the boiler; small quantities of steam and *water*, which are capable of regulation, are thus allowed to enter into the cylinders at the sucking of the pistons, instead of the air or fire-gases. Water is admitted, in order to prevent a superheating of the steam during the compression, and thus causing a drying of pistons and valves.

But experience and closer examination of the diagram shows that Lechatelier's method, especially at a high speed of the engine, is in many

Digitized by Google

cases not powerful enough. At a high velocity the piston will, in consequence of the gradual opening of the port of admission, for the admission of the counter-steam, travel a larger distance before the full counter-pressure of the steam in front of the piston begins to act. There are therefore already new propositions, the so-called steam repression-brakes; in these there is no reversing; for example, von Landsee* proposes to fix on the cylinder a second valve, the eccentric of which is fastened with an angle of advance $\delta = 0$. In order to stop the engine, the exhaust-pipe is closed, the chief valve-gear put at a high grade of expansion, and counter-steam admitted through the second valve during the whole stroke of the piston. But the steam repression-brake of Messrs. Krauss and Co., of Münich, appears best to fulfil the desired end.† The exhaust-pipe is in this case closed towards the outside, its inside is, however, brought into communication with the steam-space of the boiler; besides, no reversing takes place, but the regulator is closed. The effect thus produced may also easily be determined through our valve-diagram, but this is not the place to follow out this question; and we refer therefore for further information to the interesting pamphlet by Professor Linde: '*Ueber einige Methoden zum Bremsen der Locomotiven and Eisenbahnzüge, insbesondere über die Dampfrepressions-Bremse. Pat. System der Locomotivfabrik Krauss und Comp.*' *München*, 1868.

* Mémoire sur les différentes méthodes employées pour modérer les vitesses des trains sur pentes et en particulier sur le frein à vapeur, système A. de Landsee. Mülhouse, 1867.

† Described in 'Engineering,' vol. vi., p. 475.—*Translator.*

END OF THE FIRST PART.

Digitized by Google

SECOND PART.

VALVE-GEARS WITH TWO VALVES.

Digitized by Google

Digitized by Google

VALVE-GEARS WITH TWO VALVES

THE valve-motions, which we examined in the first Part of this book, were constructed in such a manner that the distribution of the steam was effected by means of a single valve; if the movement of this valve is derived from a link, then it is even possible, as has been fully explained in the first Part, to reverse the engine and to make it run forwards and backwards with variable expansion. But experience and an inspection of our diagram, as given for the link-motions, shows in this case a peculiarity in the distribution of the steam; for the higher the expansion, *i.e.* the earlier the steam is cut off by the *one* valve, the greater the compression of the steam becomes behind the piston; also, the valve then shuts the ports earlier for the release of the steam. The steam, which has to escape into the open air, is confined behind the piston, and the piston in travelling forwards compresses it therefore till the valve opens the port for the admission, an event which generally takes place before the piston has reached the end of its stroke. But the compression of the steam requires power, which the engine under certain circumstances loses. This is the reason why many engineers declare the link-motions with one valve to be bad arrangements for producing expansion, and consider them only useful as arrangements for reversing the engines.

Much, however, may be said against the correctness of this opinion.

First, it is well known that other constructions, for instance the double-valve motions, which do not cause the compression of the steam, or at least do so very little, could not at all replace at the present time the link-motions with one valve; but that, on the contrary, even the more complicated valve-motions with two valves have been

Digitized by Google

abandoned on the locomotives of different lines and the more simple valve-motions with one valve have again been applied.

Next, it is to be observed that the locomotive drivers, who certainly have a special interest in making the best use of their valve-motions, mostly use those grades of the link at which the influence of the compression ought to be very disadvantageous.

We might conclude at once from these statements, that an essential loss of power is not, at least under all circumstances, produced by the compression of the steam in consequencc of a very early cutting off. But a closer examination of our diagram will also lead us without anything further to the result, that the link-motions with one valve may produce under certain circumstances an advantageous distribution of the steam, even for a high degree of expansion.

The upper part of Fig. 8, Plate II., represents the chief positions of the piston in a valve-motion on Stephenson's system; let us examine the positions corresponding to the second grade of expansion. The expansion begins at *a*, the compression at *b*; the steam has at the beginning of the latter a pressure behind the piston a little higher than an atmosphere; the compression lasts until the piston has arrived at the position *d*, and then the exhaustion of the steam at once begins. If we imagine now that the steam at *d* has in consequence of the compression attained a pressure behind the piston just equal to that of the entering steam, then we have produced to a certain extent by the compression fresh steam, which will give out its work at the next stroke of the piston. It is thus to be supposed at least, that the work expended on the compression is again given out to a great extent. That the steam at *d* may have a pressure just or nearly equal to that of the steam in the boiler, it is merely necessary to give to the so-called prejudicial space the required extension. This space is therefore without doubt of great importance and useful influence in link-motions, and the different opinions respecting the effect of the link-motions with one valve, as derived from experience, may perhaps be based upon the circumstance, that this space has not in different locomotives the corresponding size.

But the calculation offers a better explanation respecting the

Digitized by Google

question here raised. Reuleaux first gave in his treatise 'Ueber die Wirkung der Dampfvertheilung bei den Coulissensteuerungen,' (On the Effect of the Distribution of the Steam in Link-motions, published in the Civilingenieur, vol. iii., page 43), an exact account of the influence of the so-called prejudicial space upon the compression; and later, Zeuner in his book, 'Grundzüge der mechanischen Wärmetheorie' (Principles of the Mechanical Theory of Heat), has fully explained the influence of the compression of the steam and of the prejudicial space upon the whole working of the steam-engine, so far as is possible at the present state of the theoretical foundations, supplied by the mechanical theory of heat.

But this question is not yet decided, for correct and exact indicator trials are wanted; trials which should be undertaken with special consideration of those requirements which are demanded by the theoretical investigations.

It is not the place here to enter more upon the question indicated; it was only intended to state, that the valve-motions with two valves are principally indebted for their origin and application to the opinion, that the compression of the steam behind the piston, as it occurs in the case of the link-motions with one valve at a high degree of expansion, is disadvantageous, but that this opinion is by no means to be accepted as entirely justifiable.

The one of the two valves, the expansion-valve, only effects the cutting off of the steam, and such an arrangement of the different parts of the valve-motion is therefore generally chosen, that this cutting off of the steam may take place either sooner or later; or, in other words, the expansion is generally a variable one. The second valve, the distribution-valve, regulates only the beginning of the admission and of the exhaustion of the steam; it generally has an invariable stroke and only small inside and outside laps. This distribution-valve is, in the reversing motions, moved by the link, which then generally only serves for the reversing, and is only used in its extreme positions.

The disadvantage of the compression, supposing that we can, after what we have said, speak in general about such a disadvantage, certainly disappears when a special expansion-valve is applied; but there now arises at once the other question, whether the advantage which

Digitized by Google

is expected in consequence of the removal of the compression of the steam, is not partly or perhaps entirely compensated by the considerable loss of power which is connected with the movement of a *second* valve. Only experience and exact trials can give a solution to this question; but the experience already derived from locomotives indicates that valve-motions with double valves are only applied with advantage at a high pressure of the steam, and *that the link motions with one valve are quite sufficient for the steam pressures usually employed at the present time.* But as soon as the pressure in the boilers of locomotives,—as has already sometimes been done and with perfect success,—is increased to 10 and 12 atmospheres, the application of a special expansion-valve will become perhaps indispensable. At the present state of our knowledge, respecting the most advantageous use of the steam power, everything indicates that a further progress in the employment of steam is principally to be expected by applying steam of as high a pressure as possible, and by producing thus a higher, but more perfect, expansion.

A beginning has already been made in locomotives, and as soon as the application of steam of a higher pressure than usual shall have become more general in these engines, valve-motions with two valves will receive, perhaps, more attention, and will be also more frequently applied.

Valve-motions with two valves shall, therefore, be examined in the following Part, in the same complete manner as has been followed in the First Part in the case of valve-motions with one valve; but we have in this case, as in the previous one, only to answer the question, whether the valve-motions with a separate expansion-valve, which are principally applied at the present time, fulfil, with regard to construction, the conditions which are required in a correct valve-motion in order to produce a variable expansion. It is chiefly necessary that the steam may be cut off at any position of the crank. The following investigations will now show whether this is really the case in the systems applied up to the present time, and if not, what grade of expansion may be produced by each system, or what improvements are allowable in the different constructions.

But we shall examine only the most important of the valve-

Digitized by Google

motions with two valves as applied to locomotives, *viz.* those by *Gonzenbach*, *Meyer*, and *Polonceau*, and shall consider them always as reversing motions, in which the distribution-valve receives its motion from a link. The more simple case, in which this latter motion is produced by a fixed eccentric, may easily be derived from the general one. After the following investigations, there cannot exist any difficulty in extending these examinations to other valve-motions, which have not been mentioned in this treatise.

The manner of investigation will be different in this case from the previous one; we shall give the theory and the practical application of the diagram simultaneously. The theoretical examinations are so simple, that every reader acquainted with the elements of mathematics will easily understand them.

CHAPTER I.

Valve-Motion by Gonzenbach.

Description of the Valve-Motion.

THIS valve-motion is represented by Fig. 18, Plate IV. O is the centre of the driving-axle, D the forward and D_1 the backward eccentric, D C the eccentric rod of the first eccentric, D_1 C_1 that of the latter one. C C_1 is a link, which moves the distribution-valve A in the same manner as in Stephenson's valve-motion; but the link C C_1 is in the present case generally not for the purpose of producing a variable expansion, but only for effecting either the forward or backward motion of the engine, or for bringing it to a full stop: this is effected by either quite lowering the link by means of the lever L and the rod K, so that the forward eccentric only governs the valve-spindle, or by quite raising the link, so that the valve receives its motion from the backward eccentric, or finally, by placing the link in its central position, so that the dead point J of the link drives the valve-spindle, and consequently, on account of the peculiar distribution of the steam which takes place at this position of the link, and which has previously been explained, brings the engine to a stop.

But other positions of the link are generally not employed in the

Digitized by Google

present valve-motion to govern the movement of the valve, so as to produce a *variable expansion*, as is the case in Stephenson's system, for such variable expansion is produced by the expansion-valve B, which receives it motion in the following manner. The rod F E, which is fastened by its end E to a second link M E, is connected through a pin F with the strap of the backward eccentric, and is thus moved backwards and forwards; the link M E, which swings round the fixed point M, thus receives an oscillating motion. The end N of the radius-rod N Q moves up and down in this link, and may be fixed in a certain position by means of the lever l and the rod k; the radius rod is connected at its end Q with the spindle of the expansion-valve B, so that the backward and forward motion of the point N is transferred to the latter. Of course the nearer the point N is to the fixed point M, the smaller the stroke of the valve. The distribution-valve A is a common D valve, the outside and inside lap of which, however, is taken in the present case smaller than usual; but the expansion-valve, which moves in a separate steam-chest upon the cover of the steam-chest of the distribution-valve, is a *gridiron-valve*. If the slots of the valve coincide with the openings a_0 a_0 in the partition between the two steam-chests, the steam enters into the chest of the distribution valve; and the expansion will begin as soon as the expansion-valve shuts the openings a_0. The slots in the expansion-valve, which, as well as the distribution-valve, is generally made of brass, are almost always a little larger than the openings a_0.

Theory and Application of the Diagram.

Before we enter upon an investigation of the distribution of the steam as effected by the present valve-motion, and give a very simple diagram for it, it is desirable to consider at first a more simple case, and suppose, therefore, the slot-valve to be moved by an eccentric, *i.e.* the expansion to be a fixed one.

Fig. 39*a* shows the expansion-valve in its central position; the slots are a little larger than the openings, a_0 a_0, for the admission of the steam, and the distance which the edges b b are beyond the edges c c may be called e_0.

Digitized by Google

If we now suppose the valve to be moved as much as the distance ξ_0 towards the right-hand side, as shown in Fig. 39*b*, the following relation, as will easily be seen from the figure, takes place between the distance a_1 of the opening of the steam-port a_0 and the distances ξ_0, e_0, and a_0,

$$\xi_0 + a_1 = e_0 + a_0,$$

whence follows the opening of the port for the corresponding movement ξ_0 of the valve from its central position

$$a_1 = a_0 + e_0 - \xi_0; \quad (91)$$

Fig. 39.

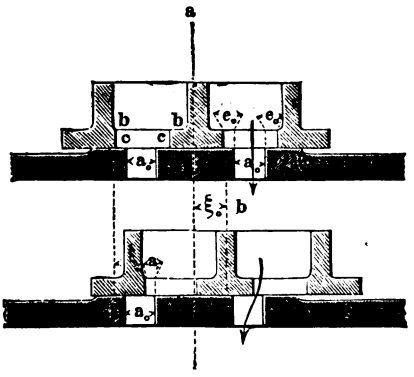

a_0 and e_0 are constant values; ξ_0 alters, however, with the turning of axle; this movement of the valve is now easily found from the angular movement of the axle in the following manner:—

Fig. 40.

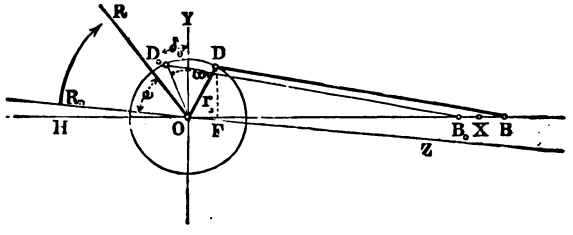

O B (Fig. 40) is supposed to be the direction of the valve-face, O R_0 is the position of the crank on the dead point, and O $D_0 = r_0$ is the eccentricity of the eccentric which according to our supposition moves the expansion-valve, and which forms with the direction of the valve-face the angle H O $D_0 = 90 - \delta_0$. This angle is in a common distribution-valve equal to $90 + \delta_0$, when δ_0 is called the angle of advance; but in the present case it is better to fix the eccentric (as will be seen from the following investigation), not with an angle of advance, but so that the eccentric follows after the crank.

If we suppose now the axle to have turned through the angle ω, the crank will then have arrived at the position O R, the eccentricity

Digitized by Google

at O D, and the centre of the valve B will have moved from its central position as much as $B X - \xi_1$. If the eccentric rod B D be supposed to be infinitely long, the movement of the valve is $\xi_0 = B X = O F$, or as according to the figure:

$$O F = r_0 \cdot \sin (\varphi - \delta_0),$$

the movement of the valve corresponding to the angular movement φ:

$$\xi_0 = r_0 \sin (\varphi - \delta_0).$$

Substituting this value in equation (91), we get the corresponding opening a_1 of the steam-port:

$$a_1 = a_0 + e_0 - r_0 \sin (\varphi - \delta_0). \qquad (92)$$

This expression may now again be represented by a simple diagram.

$$\xi_0 = r_0 \sin (\varphi - \delta_0)$$

is, according to previous investigations, nothing else but the polar-equation of two tangential circles of the diameter r_0, the pole of which is at the point of contact, as the following observations will at once prove.

Fig. 41.

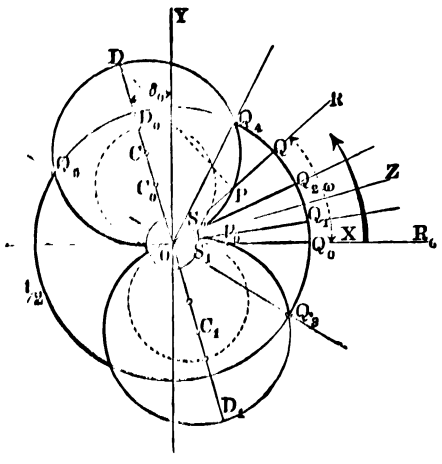

Draw in Fig. 41 the axes O X and O Y perpendicular to each other; draw next through O another line D D_1, so that the angle D O Y = δ_0 and D O = D D_1 = the eccentricity r_0; if we now bisect D O and O D_1 in C and C_1, and describe from these points circles with $\frac{r_0}{2}$ as radii, the chords drawn from O will then at once represent the movements of the valve. For if we draw through O another line O Z normal to O D, then the angle Z O X = δ_0; if we suppose the eccentric rod to be in the direction O X, and also the crank O R_0 at the same position on its dead point, and then turn

Digitized by Google

the crank in the direction of the arrow through the angle $R_0 O R = \omega$, the chord O P again gives at once the movement ξ_0 of the valve corresponding to this angular movement of the crank. For if we connect also P with D, then

$$O P = O D \,.\, sin\, O D P.$$

But as $O D = r_0$ and angle $O D P$ = angle $P O Z = \omega - \delta_0$, there follows, as previously stated,

$$O P = r_0 \, sin\, (\omega - \delta_0) = \xi_0;$$

a value exactly equal to that above given for ξ_0.

We have chosen $r_0 = 0{\cdot}050^m$ (1·96″) and $\delta = 15°$; the figure is drawn half-size; the measurement of O P gives now at once at the supposed position of the crank for the corresponding movement of the valve $\xi_0 = 0{\cdot}023^m$ (0·92″). If we describe next from O the circle $Q_0 Q_1 Q$ with $O Q = a_0 + e_0$ as radius, we get:

$$Q P = O Q - O P \text{ or according to the above}$$
$$Q P = a_0 + e_0 - \xi_0,$$

i. e. Q P gives, according to equation (91), *at once the opening,* a_1, *of the steam-port corresponding to the angular movement* ω *of the crank.* If the figure had been drawn full size, the measurement for the present case would give $Q P = a_1 = 0{\cdot}014^m$ (0·551″), as a_0 had been supposed to be $0{\cdot}030^m$ (1·18″) and $e_0 = 0{\cdot}007^m$ (0·27″). In order therefore to ascertain for a certain position O R of the crank the corresponding opening which the expansion-valve at that moment allows, it is only necessary to measure in the diagram that part Q P of the line representing the position of the crank which falls between the two circles O P D and $Q_0 Q_1 Q$. But the figure gives at once a full explanation of the working. When the crank is at the position $O Q_3$, therefore as much as $Q_3 O Q_0$ *before* the dead point, the expansion-valve is just beginning to open the port, and it opens it the more the farther the crank moves in the direction of the arrow. If the crank has arrived at the dead point $O R_0$, the measurement of $Q_0 P_0$ ($0{\cdot}0235^m = 0{\cdot}92''$) gives the opening of the port at that moment. Now, if we also describe from O another circle with $O S_1 = O S_2 = e_0 = 0{\cdot}007^m$ (0·27″) as radius, and imagine the crank turned beyond the dead point as much

Digitized by Google

as the angle $S_1 O Q_0 = Q_1 O Q_0$, then $O Q_1$ is the position at which the port is quite open, for according to the construction $Q_1 S_1 = a_0 =$ the width of the port. During the time the crank passes through the angle $Q_1 O Q_2$, the port remains quite open, for $Q_1 S_1 = Q_2 S_2 = a_0$. As soon as the crank arrives at the position $O Q_2$, the valve again begins to shut the port, the closing continuing until the crank has arrived at $O Q_0$, at which position the port is completely closed, and at which moment the expansion begins. The expansion-valve opens again at the position $O Q_5$ of the crank, and the whole procedure is repeated during the exhaustion of the steam on the other side of the piston. The simple diagram shows thus, in a very comprehensible manner, the distribution of the steam, as obtained from a slotted valve, and gives at the same time rules for the determination of the dimensions r_0, δ_0, e_0, and a_0. A few words for the explanation of these rules may now be added here. We shall suppose at first the dimensions of the valve, for instance, a_0 and e_0, to be fixed, as in the diagram Fig. 41, and shall, in imagination, alter the eccentricity $O D = r_0$, but without altering δ_0. It will now be seen at once that, if we *increase* r_0 or the diameters $O D$ and $O D_1$, the valve-circles will cut the circle $Q_0 Q_1 Q_4$ at points which are situated upon the circumference of the latter nearer to Q_0 than Q_3 and Q_4, *i.e. a better expansion could be produced,* but the admission of the steam would commence later. The reverse would be the case, if $O D = r_0$ were taken smaller than in the figure; when r_0 became as small as is indicated by the diameter of the circle $O D_0$, which is described from C_0 and shown in the figure in dotted lines, no expansion would take place, for the circles would not intersect each other any longer, and the valve *would allow the steam to enter uninterruptedly into the steam-chest of the distribution-valve.* The effect of the expansion-valve would thus be reduced either to widening or to narrowing uninterruptedly the openings in the partition; and the expansion-valve would therefore not only be inefficacious, but, moreover, disadvantageous; and in order to prevent this, it is necessary to make always

$$a_0 + e_0 \text{ smaller than } r_0.$$

This may easily be done for a fixed expansion; but in the case of

Digitized by Google

a variable expansion, in which this variation is produced by means of altering the eccentricity, as is, according to the following investigations, really the case in Gonzenbach's valve-motion, results will be obtained which are, as will be shown in the following, not very advantageous.

If we suppose now the radius $O Q = e_0 + a_0$, to be *smaller or larger* than taken in the diagram, but the other dimensions to be unaltered, the points of intersection Q_3 and Q_4 fall then on the valve-circles nearer D and D_1, or nearer Q_0; the admission of the steam being in the former case a longer one, and in the other case a shorter one, and the admission of the steam will commence sooner or later. The expansion may be also altered in another manner, *viz. by means of a variation of the value* $e_0 + a_0 = O Q$, and this is really the case in Meyer's valve-motion, as will be shown in another chapter. These preliminary observations show, therefore, already, that the valve-motions by Gonzenbach and Meyer are in general of the same nature. It follows also from the diagram of the alteration last supposed, *viz.* of the value $e_0 + a_0$, that we must always have

$$e_0 + a_0 \text{ smaller than } r_0,$$

and that an uninterrupted admission of the steam will take place, as soon as $e_0 + a_0$ becomes larger than r_0. The manner in which an alteration of δ_0, *i.e.* of the angle which the centre line of the eccentric of the expansion-valve forms with the direction of the valve-face, made by taking $90 + \delta_0$, instead of $90 - \delta_0$, will influence and alter the distribution of steam, can easily be seen from the figure, without any further explanation.

Before we enter upon the investigation of the general case, it remains to connect the diagram of the expansion-valve with the diagram of the distribution-valve, known from that which has previously been stated; we get thus a double diagram (Fig. 43, page 171), which shows in a very comprehensive manner the distribution of the steam, as produced by a simultaneous application of the two valves. The diagram is drawn for the case represented by Fig. 42. Two eccentrics are fixed upon the axle O; the one, the eccentricity of which $O D_0 = r_0$ forms with the centre line of motion O B, the angle

Digitized by Google

$90 - \delta_0$, moving the expansion-valve; whilst the second eccentric, the eccentricity of which $O D = r$ forms with the same line the angle

Fig. 42.

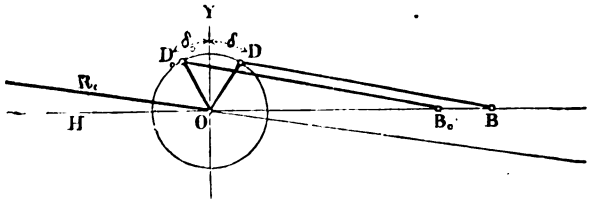

$90 + \delta_0$, moves the distribution-valve. This arrangement is now not met with in practice, at least not in locomotives, but we take it in the present case as an example, because the distribution of the steam is here exactly similar to that effected by Gonzenbach's valve-motion for locomotives, and the understanding of the chosen simple case greatly facilitates the study of Gonzenbach's valve-motion.

Fig. 43 is drawn under the supposition that, as in diagram Fig. 41, the values $a_0 = 0{\cdot}030^m$ (1·181″), $e_0 = 0{\cdot}007^m$ (0·27″), $\delta_0 = 15°$, $r_0 = 0{\cdot}050^m$ (1·96″); in order, therefore, to ascertain the distribution of the steam effected by the expansion-valve, it was only necessary to draw the circles of the diagram Fig. 41 again in Fig. 43, and they are thus shown in the present diagram by *thin* lines.

The diagram of the distribution-valve is added to this, and is drawn also half-size, according to the rules already given. It is shown by *dark* lines; and the following values for the different dimensions have been chosen:—The eccentricity of the eccentric for the distribution-valve $r = r_0 = 0{\cdot}050^m$ (1·96″); but the angle of advance $\delta = 20°$; the outside lap $e = 0{\cdot}011^m$ (0·43″), and the width a of the port $= 0{\cdot}030^m$ (1·18″), and is therefore as large as the width of the openings in the partition between the two steam-chests. The angle Y O D has thus been made equal to $\delta = 20°$, $O D = O D_1 = 0{\cdot}050^m$, both lengths have been bisected in C_2 and C_3, and the valve-circles drawn from these points. Besides, we have drawn from O circles with the outside lap $O V = e = 0{\cdot}011^m$ (0·43″), and with $O U = e + a = 0{\cdot}041^m$ (1·614″) as radii.

Let us suppose the crank to be at first in the position $O R_0$ on its

Digitized by Google

dead point, and let it be afterwards turned in the direction of the arrow through any angle $R_0 O R = \omega$, then the diagram at once gives for this position O R of the crank, according to that which has been already stated, the following proportions, to which the measurements for the present special case are added.

Fig. 43.

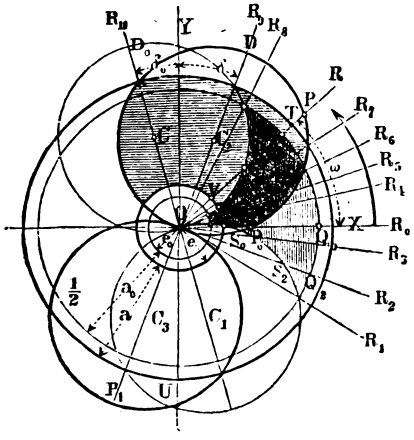

Movement of the *distribution-valve* from its central position O P $= 0{\cdot}044^m$ (1·73″); opening of the port for the admission of the steam $=$ V T $= 0{\cdot}030^m$ (1·18″) $= a$; *i.e.* the port is quite open at that moment, and the outer edge of the valve stands as much as P T $= 0{\cdot}003^m$ (0·118″) beyond the inner edge of the port.

O S $= 0{\cdot}0225$ (0·88″) indicates at the same time the movement of the expansion-valve, and S Q $= 0{\cdot}0155^m$ (0·68″) the opening of the port in the partition. It will thus be seen that that part of the centre line of the crank, which coincides with the part of the double diagram marked by horizontal and narrow vertical hatchings represents the opening which the distribution-valve allows at the same moment for the steam to enter the cylinder. But that part which coincides with the vertical hatchings gives at once the opening which the expansion-valve offers to the steam for entering into the steam-chest of the distribution-valve. During the time the centre line of the crank passes through that part of the surface of the diagram which is covered with narrow vertical hatchings, *admission of the steam into the cylinder takes place.* But in order to show still more the remarkable peculiarities of the double diagram, the chief positions of the crank shall be given more exactly, according to Fig. 43, when we only refer to that which has been already stated.

O R_1 is the position of the crank, and $R_0 O R_1$ the angle through which the crank has to travel before it arrives at the dead point, at the moment when the expansion-valve begins to open the inter-

Digitized by Google

mediate port and the distribution-valve closes the two openings. O R_2 (perpendicular to O D) is the position of the crank at which the distribution-valve has arrived at the middle of its stroke. The expansion-valve has already opened as much as $S_2 Q_2$. O R_3 is the position of the crank at which the distribution-valve begins to open the port, and therefore that at which the admission of the steam into the cylinder begins. O R_0 represents *the crank on the dead point;* the distribution-valve has in this case opened the port as much as $V_0 P_0$ (= lead), and the expansion-valve the intermediate port as much as $S_0 Q_0$.

O R_4. The expansion-valve has just begun to open the intermediate port.

O R_5. The expansion-valve has arrived at the middle of *its* stroke (O R_5 perpendicular to O D_0).

O R_6. The expansion-valve begins to close again the intermediate port.

O R_7. The port, which up to this time has been opened more and more widely by the distribution-valve, is now fully opened, and it remains *full* open until the crank has arrived at the position O R_{10}.

O R_8. The expansion-valve cuts off the steam. *Beginning of the expansion of the steam.*

O R_9. The distribution-valve is farthest from its central position, &c., &c.

With reference to the exhaustion of the steam, as regulated by the distribution-valve, there is nothing to add to that which has been already stated.

We may enter now, after these preparations, upon the investigation of Gonzenbach's valve-motion.

Fig. 44.

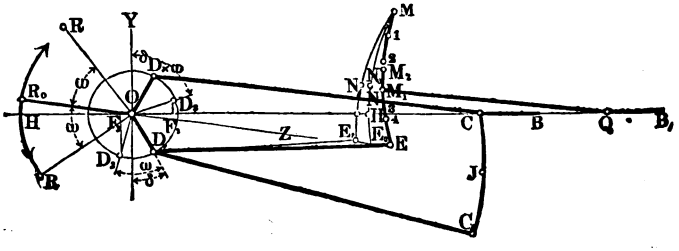

Digitized by Google

The arrangement given in Fig. 18, Plate IV., is again represented in outline in Fig. 44. The centre lines of both the forward and backward eccentrics form, with the centre line of motion, the angles H O D and $H O D_1 = 90 + \delta$. In the figure the link $C C_1$ is shown quite lowered, and the forward eccentric, therefore, governs the movements of the distribution-valve; the engine thus stands in *fore-gear*. If the crank has travelled through the angle $R_0 O R = \omega$, O D has moved to $O D_2$, and the distribution-valve, like the point C, has moved from its central position as much as $O F_2 = r \sin(\omega + \delta) = \xi$, it being supposed that $r = O D$ represents the eccentricity. As this equation is the same as the one which we previously obtained for the simple valve-motion with one valve, the diagram for the distribution of the steam, as produced by the distribution-valve, is determined in the same manner as before. The circle described from C, and drawn in Fig. 19, Plate V., with *thick lines*, is thus the valve-circle for the distribution-valve; the diameter O D of this circle is taken equal to the eccentricity $r = 0{\cdot}0675^m$ (2·6″), and the angle $Y O D = \delta = 18°$. Circles with the outside lap of the distribution-valve $OV = e = 0{\cdot}0185^m$ (0·72″), and also with $O U = O V + V U = e + a$ as radii, are next described from the point O; $a = 0{\cdot}025^m$ (0·98″) represents the width of the port. The first circle is marked III. in the figure, the other one I. The part of the diagram above the axis O X, covered with horizontal hatchings, again represents, in the manner already explained, the openings of the ports for all positions of the crank for the forward motion, as produced by the movements of the distribution-valve. If the link $C C_1$ is quite raised, the movements of the distribution-valve are governed by the backward eccentric $O D_1$ (Fig. 44), and the engine stands in back-gear. If we suppose, therefore, the crank turned backwards through the angle $R_0 O R$, the valve is again at this moment removed from its central position as much as $O F_2 = r \sin(\omega + \delta)$. This is the same equation as above; and the movement of the valve could therefore be examined, as has been done previously, by the aid of the same valve-circle as used for the forward motion. But the valve-circle shall be taken in this case for the backward motion in Fig. 19, Plate V., below the axis O X: we thus take $Y^1 O D^1 = \delta$ and $O D^1 = r$. If $O R_0$ represents the

Digitized by Google

position of the crank on the dead point, and if the crank is turned in the direction of the arrow drawn in the figure with full lines, the engine works in fore-gear, and the upper valve-circle, drawn with thick lines, represents, according to known rules, the distribution of the steam as it would be effected by the distribution-valve, *without* the application of the expansion-valve.

If the link is quite raised for the backward motion, the engine works in back-gear, the crank moving from O R_0 in the direction of the arrow shown in the figure by dotted lines, and then the valve-circle described below O X, and drawn with thick lines, explains the distribution of the steam as produced by the movements of the distribution-valve.

It would not be necessary, as already stated, to draw different diagrams for the backward and forward motion, if we had to deal with the distribution-valve only, for both circles are symmetrical to O X. But the peculiar action of the movement of the expansion-valve, as supposed by Gonzenbach, requires this difference, as will be shown presently. Next the equation for the movement of the expansion-valve is to be determined in a general manner. As the motion of this valve depends on the position of the radius-rod N Q (Fig. 44), and varies as the point N is placed nearer to or farther from the centre point M of the link M E, special notice has to be taken in the present case of the variable distance M N, which may be designated by u. Let the total length M E of the arc or link be c, and the distance of the point H (which marks the *lowest point* to which the end N of the radius-rod N Q can be lowered) from the centre point M be M H $= c^1$. In order now to obtain a better understanding of the movement of the valve, and especially to ascertain the influence of the position of the end N of the radius-rod N Q in the link, we shall divide the length M H into a certain number of parts, in this case into four, and number them from M. We shall say, then, according to the position of the radius-rod, that the sliding-block stands at the first, second, third, fourth grade.

We shall at first consider the link to be quite lowered, so that the engine works in *fore-gear*. If the crank has turned from its position O R_0 (Fig. 44), on the dead point, through the angle R_0 O R $= \omega$,

Digitized by Google

the eccentricity O D_1 will have moved to O D_2. The point E_1 is at that moment distant from its central position E_0 approximately as much as $E_1 E_0 = O F_2 = r \sin(\omega - \delta)$, and thus, according to the figure, towards the left-hand side. Thereby the movement of the point N_1 is equal to $N_0 N_1$, and thus we have

$$N_0 N_1 : E_0 E_1 = M N_0 : M E_0,$$

or, according to our definition,

$$N_1 N_0 = \frac{u}{c} . r \sin(\omega - \delta);$$

but this is also, at the same time, approximately, the movement of the expansion-valve from its central position with a long radius-rod, thus the movement of the valve

$$\xi_0 = N_1 N_0 = \frac{u}{c} r \sin(\omega - \delta).$$

But in consideration of Fig. 39*b* (p. 165) we have for this movement ξ_0 of the valve the relation

$$\xi_0 + a_1 = a_0 + e_0$$

therefore the opening of the intermediate port corresponding to the angular movement ω of the crank

$$a_1 = a_0 + e_0 - \frac{u}{c} r \sin(\omega - \delta). \qquad (93)$$

This is the same equation as the one which we previously found for the case represented in Fig. 40 and examined in Diagram 41, page 166, with this difference only, that in the present case $\frac{u}{c} r$ appears in the formula for r_0. This value $\frac{u}{c} r$ represents to a certain extent *a variable eccentricity* r_0, and as there have been supposed four grades of expansion, we have strictly taken four different valve-motions, for which, however, in this case only one single diagram is drawn.

Let the sliding-block be at first at No. 4 or at H (Fig. 44), then $u = c_1$, thus

$$\frac{u}{c} r = \frac{c_1}{c} r.$$

Digitized by Google

If we suppose these values to be known, as for example $c_1 = 0{\cdot}024^m$ $(0{\cdot}94'')$, $c = 0{\cdot}300^m$ $(\cdot 118'')$, $r = 0{\cdot}0675^m$ $(\cdot 264'')$, the circle for the expansion-valve for the fourth grade and forward motion is then at once obtained from the diagram, Fig. 19, Plate V., according to that which previously has been explained, in the following manner: Make $Y\,O\,D_4 = Y'\,O\,D_4' = \delta = 18°$, and $O\,D_4 = O\,D_4' = \frac{c_1}{c}\,r = 0{\cdot}054^m$ $(0{\cdot}21'')$.

Bisect the distances $O\,D_4$ and $O\,D_4'$, and describe above and below the axis $O\,X$ the valve-circles marked 4 in the figure. Describe next from O the circles IV. and II. with the radii, as supposed in this case, $O\,S = e_0 = 0{\cdot}00\,375^m$ and $O\,Q = e_0 + a_0 = 0{\cdot}02875^m$, and the points of intersections of these four circles then give, exactly in the same manner as described in explaining Fig. 41, all occurrences with respect to the distribution of the steam as produced by the expansion-valve, when *the sliding-block N of the radius-rod is at the fourth grade.* If we combine these results with those of the diagram of the distribution-valve for the forward gear, any question with regard to the fourth grade may, as explained with regard to Fig. 43, easily be answered. In order to show the occurrences for this grade in a clear manner, the corresponding parts of the diagram are again marked with hatchings. If we therefore examine in Fig. 19, Plate V., the different positions of the crank and consider the parts which fall upon the spaces marked by hatchings, the openings of the ports, as produced by the two valves at the fourth grade, are thus at once determined.

But if the sliding-block N is at the third grade (Fig. 44), we have

$$\frac{u}{c}\,r = \frac{\frac{3}{4}\,c_1}{c}\,.\,r, \text{ for } u = \tfrac{3}{4}\,c_1;$$

making, therefore, $O\,D_3$ and $O\,D_3' = r_3 = \frac{3}{4}\,O\,D_4$ and describing the valve-circles marked 3 with $O\,D_3$ and $O\,D_3'$ as diameters, the points of intersection of these circles with those marked II. and IV., explain in the manner already known the distribution of the steam for the forward gear, as produced by the expansion-valve at the third grade. The corresponding parts of the diagram for the expansion-valve are in this case not marked with hatchings; the investigations belonging to this case have already been made on the occasion of explaining

Digitized by Google

Fig. 43, and we need, therefore, not repeat them here. The facility and certainty with which the distribution of the steam is ascertained for any grade of expansion will now easily be seen.

If the sliding block N is at the second grade (Fig. 44), then $u = \frac{3}{4} c_1$; therefore, according to the above:

$$\frac{u}{c} r = \frac{3}{4} \frac{c_1}{c} r = \frac{1}{2} \frac{c_1}{c} r.$$

But $O D_4 = O D'_4 = \frac{c_1}{c} r$, therefore, for the second grade the diameter $O D_2 = O D'_2$ of the valve-circle for the expansion-valve (Fig. 19, Plate V.)

$$O D_2 = O D'^2 = \frac{1}{2} . O D_4 = \frac{1}{2} O D'_4.$$

Now, if we again bisect $O D_2$ and $O D'_2$ and describe the circles marked 2, we may easily explain the distribution of the steam as produced by the expansion-valve at the second grade.

If the sliding-block N is at the first grade (Fig. 44), then

$$u = \frac{1}{4} c_1, \text{ therefore}$$

$$\frac{u}{c} r = \frac{1}{4} \frac{c_1}{c} r = \frac{1}{4} O D_1 = \frac{1}{4} O D'_1 \text{ (Fig. 19, Plate V.)}$$

The circles described on $O D_1$ and $O D'_1$ and marked 1, are the valve-circles for the expansion-valve at the first grade.

But the following simple rule for constructing the valve-circles for the expansion of all grades is obtained, as will be easily seen, from the preceding investigations.

Make $O D_4 = O D'_4 = \frac{c_1}{c} r$; bisect these distances at C_4 and C'_4 and divide the distances $O C_4$ and $O C'_4$ into as many parts as grades of expansion have been supposed (in the present case into four), and describe from the points of division C_1, C_2, C_3, &c., &c., the valve-circles, which then give at once by their points of intersection with the circles II. and IV. the whole distribution of the steam for all grades.

The valve-motion under consideration shall now be examined more minutely.

Let us suppose the sliding block N (Fig. 44) to be at the fourth grade, thus at the lowest point H of the link. If the crank is on the

N

Digitized by Google

dead point, thus in the position O R_0 (Fig. 19, Plate V.), and if we turn it for forward gear in the direction of the arrow shown in full lines, the expansion begins, or the expansion-valve shuts the intermediate port, when the crank arrives at the position O R_4, *i.e.* when its centre line passes through the point Q_4, at which the valve-circle (4) of the expansion-valve cuts the circle II. R_4 O R_0 is therefore the angle through which the crank has, at the beginning of the expansion, travelled beyond the dead point. The crank-pin circle has been described from O with O R_0 as radius, and the line L_0 L, which represents the whole stroke of the piston, has been drawn parallel to O R_0 (Fig. 19, Plate V., above). Dropping, therefore, from R_4 upon L_0 L the perpendicular R_4 L_4, then L_0 L_4 is the distance travelled by the piston up to the beginning of the expansion, and L_0 L_4 : L_0 L the proportion of the expansion at the fourth grade, forward gear. L_0 L_4 is taken equal to one decimeter, therefore the length L_0 L_4 expressed in decimeters is at once the proportion of the admission, in the present case = 0·175.

The circle 4 cuts the circle II. at Q_6 a second time; the line O R_6, drawn through Q_6, represents the position of the crank, at which the expansion-valve begins to again open the intermediate port, in order to allow the steam to enter into the steam-chest of the distribution-valve; a further turning of the axle and the corresponding movement of the distribution-valve admits from this point the steam into the cylinder. But we shall examine in the present case the action of the expansion-valve only, as that of the distribution-valve is already known from previous investigations. If we now put the crank back again to the position O R_0, and place the sliding-block N, for the object of an altered expansion, on the third grade, we have to determine the points of intersection of the valve-circle No. 3 with the circle II. Q_3 is the first point, O R_3 is therefore now the position of the crank at which the expansion on the third grade begins; if we drop upon L_0 L, the perpendicular R_3 L_3, L_0 L : L_0 L_3, or in the present case 0·275 is the proportion of admission for the *third* grade.

It will thus be seen that the degree of expansion is highest on the fourth grade, but that a changing from the fourth to the third grade does not alter the degree of expansion considerably; as, for example, the

Digitized by Google

proportion of admission in the present case changes only from 0·175 to 0·275.

If we now place the sliding-block on the second grade, we have to consider the valve-circle No. 2. But it will be seen that this does not cut the circle II. at all, and that, therefore, *no cut-off of the steam is effected by the expansion-valve* at the second grade; for the expansion-valve allows the steam to enter uninterruptedly into the steam-chest of the distribution-valve. The action of the expansion-valve is therefore solely confined in this case to an enlarging and narrowing of the intermediate port; the port is the least opened when the crank occupies the position O D_4, and thus has turned from the dead point through the angle R_0 O D_4. The width, to which the expansion-valve at that moment has opened the intermediate port, is at once represented upon the line O D_4 by the distance Q_0 D_2; the measurement of Q_0 D_2 gives $0{\cdot}002^m$ ($0{\cdot}078''$), whilst the total width of the intermediate port $0{\cdot}025^m$ ($0{\cdot}98''$). If we raise the radius rod still more, perhaps to the first grade, the valve-circle for the expansion is still less likely to cut the circle II. The smallest opening of the port also takes place at the first grade, when the crank occupies the position O D_4; this opening being at that moment $Q_0 D_1 = 0{\cdot}015^m$ ($0{\cdot}58''$).

There follows the peculiarity that when the engine is in forward gear, as supposed by us, the cut-off is effected by the expansion-valve only at the third and fourth grades; the expansion-valve is not only inefficacious at the first and second grades, but even disadvantageous, for a temporary narrowing of the intermediate ports produces a very disadvantageous distribution of the steam. It will already be seen from this between what narrow limits the expansion in Gonzenbach's valve-motion is confined, and that care must be taken that the engine-driver is prevented from using the first and second grades, and that he has to raise the radius rod N Q (Fig. 44) at once as high as M, when he intends to work with full steam. It would be, therefore, unsuitable to divide the link into a certain number of parts, as we have done, and to choose an arrangement which allows to the driver the use of each grade; but it is necessary to determine at first, either by experiments or by our diagram, the limits to which the expansion-valve may be applied, in order to produce any expansion of the steam.

Digitized by Google

The diagram shows that the point to which the slide block N may be raised from H, in order to produce always an expansion of the steam, is situated in the present special case between the second and third grades. No point of the link between this point—which is easily to be determined according to the following investigations by means of the diagram—and the centre point M is to be applied to governing the valve, and when the engine has to run without expansion, thus with full steam, the slide-block N has to be raised as near as possible to M, or an unnecessary narrowing of the intermediate ports is produced.

But what are now the limits of the expansion? The greatest expansion took place at the fourth grade, and it is therefore another question, what point of the link is to be used when the least expansion is to be produced by the expansion-valve?

Let us suppose the slide-block N again to be on the third grade, and the crank to be turned from O R_0, then determine the point of intersection V_4 of the *valve-circle for the distribution-valve* with the circle III., when the line O R_2, drawn through V_4, represents the position of the crank at which the *distribution-valve* begins to close the port in the cylinder. At the position O R_5, however, the expansion-valve, as previously stated, opens, at the third grade, the intermediate port for the admission of the steam on the other side.

It will now be seen at once that this latter opening must not take place before the distribution-valve has closed the port upon the other side, *i.e.* the angle R_5 O R_0 must be absolutely larger than the angle R_2 O R_0, or else the steam would be allowed to enter the cylinder twice at the forward and backward strokes of the piston. It will thus be seen that *the expansion valve must not open the intermediate port for the admission of the steam upon the other side before the moment at which the distribution-valve closes the steam-port on the first side,* and this is the case when the crank occupies the position O R_2. The centre line O R_2 of the crank cuts the circle II. at Q_2; if we draw through Q_2 and O a circle, the centre of which is on the line O D_4 (shown in Fig. 19, Plate V., in dotted lines) C_0 is the centre of this circle. This circle is then the valve-circle for the expansion-valve, corresponding to that point in the link which is the highest to which the radius rod should be raised in *order that the cut-off may*

Digitized by Google

be effected by means of the expansion-valve. But this point, marked in Fig. 44, M_1, is easily to be determined. If the required distance $M_1 M = u$, the diameter O D of the corresponding valve-circle is according to previous statements (Fig. 19, Plate V.),

$$O D_0 = u . \frac{r}{c},$$

whence, from the measurement of $O D_0 = 0{\cdot}038$ (1·49″) and $r = 0{\cdot}0675$ (2·6″) and $c = 0{\cdot}300^m$ (11·8″),

$$u = \frac{c}{r} O D_0 = 0{\cdot}168^m (6{\cdot}66'')$$

But the distance $c_1 = 0{\cdot}240^m$ (9·44″) is divided into four parts, thus each part = 0·06 (2·36″), and therefore the distance $M M_1 = u$ expressed by such parts

$$\frac{u}{\frac{1}{4} c_1} = \frac{0{\cdot}168}{0{\cdot}06} = 2{\cdot}80.$$

If we divide, therefore, in Fig. 44, the distance between the second and third grades into ten parts, the point M_1, which is the highest to which the slide-block must be raised in order that the cut-off may be effected by the expansion-valve, is situated only 2 lines of division above 3. *The limits are, therefore, the points M_1 and H.* If the driver raises the slide block N only a little above M_1, the distribution of the steam becomes very disadvantageous indeed, for steam is admitted twice during every stroke, as will be easily seen from the diagram, if we consider that Q_2 falls then still nearer towards Q_0, and the expansion-valve then again opens the intermediate port before the distribution-valve has closed its port of the cylinder. The second admission of the steam into the cylinder takes place shortly before the distribution-valve shuts the port, *fresh steam is thus once more admitted during the stroke of the piston into the cylinder, which is already filled with expanded steam.*

If the radius rod is still more raised, a point will finally be reached, at which the expansion-valve admits the steam uninterruptedly. This moment may also be easily determined from the diagram. The diameter of the valve-circle for the corresponding position of the slide-block $O Q_0 = 0{\cdot}02875^m$, whence the distance

Digitized by Google

M $M_2 = u_1$, of this point from M, as calculated in the above-given manner, equals $0 \cdot 127^m$ (5"), or the distance u_1 expressed in parts of the length M H $= c_1$

$$\frac{u_1}{\frac{1}{4} c_1} = 2 \cdot 1.$$

The corresponding point M_2 lies therefore at $\frac{1}{10}$th of the distance 2 – 3 towards 3.

The slide-block N must therefore *in no case* stand between the two points M_1 and M_2. If the block is raised above M_2, an uninterrupted and full admission of the steam into the steam-chest of the distribution-valve will take place, as already stated. The author has made experiments with a model of the dimensions above supposed, and the results above given, as well as the following ones, have been *entirely confirmed.*

We have next to answer the question respecting the limits of the expansion. The valve-circle, which belongs to the farthest point M_1, and the construction of which has been above explained (shown in Fig. 19, Plate V., in dotted lines), cuts the circle II. at Q_1 and Q_2 and connecting Q_1 with O, the position O R_1 of the crank *represents the limit of the expansion;* less expansion is not allowed, for reasons previously explained. If we drop again the perpendicular R_1 L_1 on L_0 L_1, then the corresponding proportion of expansion $\frac{L_0 L_1}{L_0 L} = 0 \cdot 320$; whilst it was at the fourth grade $\frac{L_0 L_4}{L_0 L} = 0 \cdot 175$; expansion is thus only to be used in the present valve-motion between the limits 0·175 and 0·320, whence follows that the expansion in Gonzenbach's valve-motion in the forward motion of the locomotives is so little variable that it scarcely *can be called a variable expansion;* especially if we consider that the limits during the running of the engine, on account of the movements of the slide-block N in the link are drawn still closer together than is the case in the diagram. This fact is to be accepted as general, although it is based upon a special case. The author has altered the elements on all sides, and has found that no dimensions of the valve-motion examined in this present case *could have been chosen more advantageously* (the width of the intermediate ports only might have been taken a little less), and

Digitized by Google

no better results would have been obtained. The driver *must* work the engine either with full steam or with high expansion—he has no intermediate state at his disposition, *if he cannot alter the position of the link* $C C_1$ *in a corresponding manner.*

We have next to examine the backward motion of the engine. The diagram for the expansion-valve does not alter in this case; the valve-circle of the expansion-valve, given for the different grades, are correct for the forward and backward motion; for the distribution-valve, however, that valve-circle is now to be used which lies below the axis O X (Fig. 19, Plate V.), and which is shown in thick lines. The relative position of this circle to the valve-circle of the expansion-valve is, however, now a different one to that for the forward motion, whence again other proportions with respect to the distribution of the steam are produced, which shall be explained in a few words. Let the slide-block N be at first at the fourth grade, and the crank on the dead point O R_0 (Fig. 19, Plate V.). The two valves have opened at that moment, and if we now turn the crank in the direction of the arrow shown in *dotted* lines, the expansion-valve will be closed when the crank has arrived at the position O R'_4, which passes through the point of intersection Q'_4 of the two circles 4 and II.; the action of the expansion begins at that moment, after the piston has only travelled the distance $L_0 L'_4$ (compare the lower part of the figure). If we turn the crank as far as O D', the *two* valves are then at this position most distant from their central positions. Of course, the distribution-valve has fully opened the steam-port, but the expansion-valve keeps the intermediate port closed. If we turn the crank as far as O R'_6, *i.e.* to the second point of intersection Q'_6 of the valve circle 4 with the circle II., then the expansion valve begins again at that moment to open; but as the distribution-valve has not yet quite closed the steam-port, for the openings amount still to $V'_1 P_1 = 0{\cdot}017^m$, steam enters during the angular movement of the crank from O R'_6 to O R'_2 for the *second* time on the front of the piston, *and the cylinder, which is already filled with expanded steam, is thus filled once more with fresh steam,* as was the case during the forward motion when the slide-block occupied a position between M_1 and M_2 (Fig. 44).

The same effect is produced at the third grade backward

Digitized by Google

motion; the cutting-off of the steam takes place in this case when the crank occupies the position O R'_3; but the expansion-valve opens again O R'_5, and thus, when the steam-port is still fully *uncovered* by the distribution-valve. *Admission of the steam* thus takes place a *second* time in this case also during the angular movement R'_5 O R'_2. The expansion begins at the position L'_3 of the piston. But this expansion is in the two cases of no use, for the steam enters a second time at the fourth grade whilst the piston travels the distance L'_6 L'_2, and at the third grade whilst it travels from L'_5 to L'_2. The distances travelled by the piston, during which steam enters, are marked in the lower part of Fig. 19, Plate V., by horizontal hatchings.

Whilst therefore the expansion-valve, working at the fourth and third grades, produced during the forward motion an advantageous distribution of the steam, it gives during the backward motion a distribution so exceedingly disadvantageous that the driver ought not on any account to use these two grades for the backward motion. Let us suppose, for example, that the locomotive has to run from a station for a long distance in back gear, and the driver raises the radius rod completely, so that the engine starts without expansion. In order now to modify the action, we suppose him to bring the slide block to the third grade; of course the action will thus be diminished, but the consumption of the steam will be as great as under full steam, and all parts of the valve-gear are subjected to a most extraordinary wear and tear. Admission of steam, for example, takes place at the third grade, from L'_0 to L'_3, and expansion acts from L'_3 to L'_5. If we suppose now, for example, a pressure equal to six times that of the atmosphere, then we have, on account of the proportion $L'_0 L'_3 : L'_0 L'_5 = 0{\cdot}055 : 0{\cdot}715$, the pressure shortly before the position L'_5 of the piston, not higher than about $\frac{55}{715} 6 = 0{\cdot}46$ times the pressure of the atmosphere, therefore much less than the counter-pressure. Now, fresh steam of a pressure equal to six times that of the atmosphere enters at the position L'_5 of the piston suddenly into this space, fills the whole capacity of the cylinder and drives the piston nearly to the end of its stroke, when the steam escapes into the open air. If the valve-gear is so arranged that the

Digitized by Google

driver cannot use the disadvantageous points of the link, then this occurrence may be prevented in the forward gear, for which we found a similar fact at certain positions of the radius rod. But this is not possible for the backward motion, for in this case the points 3 and 4, which have to be used for the forward motion, are the disadvantageous ones. It may therefore occur that engine drivers who are not acquainted with the peculiarities of the valve-motion of their engine, drive the latter in back gear in the manner above described, and thereby diminish the effect of the steam; but the shaking of the engine will certainly be so violent, when the steam enters the second time, that the driver will be cautioned, at least by this, to use the proper points only.

But if he now brings the slide-block on the second or first grade, the same disadvantageous distribution of the steam takes place in this case. The two valve-circles 1 and 2 do not cut the circle II., whence follows that the expansion-valve, just as was the case during the forward motion, allows the steam at these two grades to enter the steam-chest of the distribution-valve without interruption, and that the expansion-valve also in this case is not only useless, but that it makes the distribution of the steam even worse by narrowing unnecessarily the intermediate ports.

It follows, therefore, that the driver, during the backward motion, must use none of the points of division of the link for the movement of the valve, but that *he most decidedly must run with full steam,* if we suppose that the link $C C_1$ cannot be moved in a corresponding manner. This disadvantage of Gonzenbach's valve-motion is certainly important enough; of course practice starts with the opinion, that the distribution of the steam during the backward motion need not be so advantageous as for the forward motion, because the locomotives run generally but short distances only in back-gear. It is, nevertheless, very inconvenient that the whole mechanism by means of which the variable expansion is produced should become thus useless. Besides, if we consider the chief results of our investigations for the forward motion, according to which the expansion is confined between very narrow limits, the engine has to run only with *very high* or without ex-

Digitized by Google

pansion, and the distribution of the steam becomes thoroughly bad, when the radius rod is raised only above the point M_1 (Fig. 44), and not at once as high as M, then we may with full right call Gonzenbach's valve-motion an imperfect one, and agree perfectly with those engineers who prefer the simple link-motion by Stephenson. It is already well known that Gonzenbach's valve-motion is an imperfect one, but our diagram proves this fact, perhaps in a still higher degree than has been done by those who have examined the action of this valve-motion by the aid of models.

If we examine the diagram more minutely, we shall soon find that an alteration of the different parts will not improve in the least the backward motion. The forward motion might be improved a little, if the width a_0 of the intermediate ports, and thus the radius O Q, was taken a little smaller; but this will be all. It seems also that the increasing of δ will improve it; but if we consider, as may easily be explained in the diagram, that we have then also to increase the outside lap of the distribution-valve, on account of the lead, and that thus the action of the distribution-valve is deteriorated, it will be seen at once, that the different dimensions in the present case have been chosen so well that they are altogether those calculated to effect the best distribution of the steam of which the whole arrangement is capable. Of course, the most unfavourable investigation of Gonzenbach's valve-motion, as given above, is based upon the supposition, that the variable expansion is *only* to be produced by the expansion-valve and that the link, which governs the distribution-valve, is only to be used at the extreme grades, thus either quite lowered (forward motion) or quite raised (backward motion). But the matter will become much better, if we use the link itself (which is in the present case that on Stephenson's system) simultaneously with the mechanism of the expansion-valve for producing a variable expansion; the mechanism of the link is then to be arranged similar to that of the simple link-motion, but the arrangement has to be such, that the expansion-valve can be put *entirely* out of action, so that it may not move backwards and forwards in a useless and disadvantageous manner. But this is easily attained; the oscillating arc M E (Fig. 18, Plate IV.) has only to be con-

Digitized by Google

structed in such manner that the slide-block N of the radius rod N Q of the expansion-valve may be raised exactly to the fixed centre M, when, consequently, the expansion-valve will be put out of action during the movement of the engine. Gonzenbach's valve-motion would then be used in practice in the following manner:—

If it is required to drive forwards with high expansion, thus with an early cutting-off of the steam, then the link is quite lowered and the expansion-valve is brought into action by lowering the slide-block N of the radius rod N Q of the expansion-valve (Fig. 18, Plate IV.), and bringing it (in the above example) on the third or fourth grade.

If, however, a greater power of the engine is required, thus a lower expansion, then the expansion-valve is put out of action by raising the slide-block N *exactly as high as the fixed centre* M of the link M E, and altering simultaneously the position of the link C C_1; the expansion is thus produced only by the distribution-valve.

The expansion during the backward motion is *only* to be produced by the link, for, according to former investigations, the use of the expansion-valve is by no means allowed for this motion when in backward gear.

Gonzenbach's valve-motion, as a valve-motion for locomotives, is without doubt the most simple of the three double-slide valve-motions which we shall examine in this treatise; but it is certainly also the most imperfect one, and especially because it fails entirely during the backward motion of the engine. It is, however, equal to any other double-slide valve-motion, if applied to stationary engines, which always run in the same direction, or if used for fixed expansion.

CHAPTER II.

Valve-motion by Meyer.

Description of the Valve-motion.

THE valve-motion by Meyer, which was first applied in the year 1842, produces a variable expansion by means of a special and peculiar expansion-valve B (Fig. 20, Plate IV.), which moves on the

Digitized by Google

[illegible] The distribution-valve is moved by [illegible] exactly in the same [illegible] valve-motion, and the only aim [illegible] the effecting of a reversing or [illegible] by the use of the [illegible] of the link to govern the valve. [illegible] valve-motion is really not a [illegible] of a plate through which [illegible] in the middle the [illegible] The two ports [illegible] thus move [illegible] of the cylinder, and allow [illegible] through the latter ports, it being [illegible] the corresponding [illegible] The expansion-valve consists of two plates *c c*, [illegible] with right and left-hand threads, are [illegible] which of course is also [illegible] with screws [illegible] of the same kind. [illegible] the two plates will, [illegible] either approach each other [illegible] The expansion-valve forms therefore a [illegible] may either be lengthened or shortened, by which [illegible] will show, an earlier or later [illegible] of the steam, and thus a variable expansion, will be [illegible] The turning of the valve-spindle E F for the variation of [illegible] during the running of the engine in [illegible] the following arrangement has been chosen in Fig. 20, [illegible] The end E of the valve-spindle E F has for a certain length a square section, and on this portion is placed a small pinion *s*, this pinion not being fastened to the spindle, but being kept in its place by some other means. The axle moves, during the motion of the engine, backwards and forwards in the wheel, without the latter taking any part in that motion. The pinion *s* works into another wheel [illegible] fastened upon the axle L N which carries on its end L a small hand-crank K. Of course, this hand-crank is in the case of locomotives so placed that it may easily be reached by the driver. The description will now show that the turning of the crank produces a

Digitized by Google

movement of the plates of the expansion-valve; a certain position of these plates, and therefore also of the hand-crank, corresponds to a certain grade of expansion. The expansion-valve is generally moved by means of a special eccentric D_2 and the eccentric rod P Q; the eccentric is fastened to the axle with an angle of advance of nearly 90°.

The expansion-valve was also formerly often moved backwards and forwards by the cross-head of the piston-rod; the one end of a double lever was then connected with the cross-head, and the other one with the valve-spindle of the expansion-valve. The movement of the valve was then the same as that produced by an eccentric, having an angle of advance of 90°.

If we now suppose the link $C C_1$ to be quite lowered, then the forward eccentric will produce the distribution of the steam through the distribution-valve. But, as stated previously, the expansion-valve, which receives its motion from a special eccentric, moves on the top of the distribution-valve. If we next, in imagination, remove the two plates *c c* of the expansion-valve to a certain distance from each other, the distribution may then under this supposition be determined quite generally for any position of the crank. The general solution of this problem seems to be very complicated; but if we apply to the present case the method which is known from the investigations of the principal valve-motions, we obtain the law of the distribution of the steam for a given case, and the dimensions of the different parts of a required valve-motion, which has to fulfil certain conditions, are then obtained with remarkable facility and precision. There exist different opinions respecting the effect of Meyer's valve-motion, as many engineers consider the limits of the expansion to be too confined; but this is only the case when the different dimensions are chosen in an unsuitable manner.

The following will show that Meyer's valve-motion will admit, under quite fixed conditions, any grade of expansion between 0 and 1, at least for the forward motion of the locomotive. Of course, the conditions which could effect this have been seldom perfectly fulfilled in practice up to the present time, for the influence of all the different

Digitized by Google

parts of the construction could not be ascertained by trials on models, and the usual mode of examining valve-motions by calculation or construction led to most complicated results.

Theory and Application of the Diagram.

We shall, as before, at first consider a more simple case, and shall suppose that we have to deal with the valve-motion of a stationary engine, which runs only in one direction, and in which the variable expansion is to be produced by Meyer's system.

In Fig. 45, let O be the centre of the driving-axle, O X the direction of the valve-face; O R_0 the position of the crank on one of the dead points; O D = r be the eccentricity of the eccentric for the distribution-valve, and the angle H O D, which the centre line of this eccentricity forms with the centre line of motion, be $90 + \delta$, thus δ is the angle of advance. Let also O $D_0 = r_0$ be the eccentricity of the eccentric for the expansion-valve, and the angle Y O $D_0 = \delta_0$ its angle of advance. In practice r is generally equal to r_0 and $\delta_0 = 90°$. If we suppose now the axle O to be turned through the angle R_0 O R = ω, then O D will have arrived at O D' and O D_0 at O D'_0; and dropping now from D' and D'_0 perpendiculars on O X, the distance O F then represents with sufficient exactness for practice, if we suppose an eccentric rod as long as possible, the movement of the distribution-valve from its central position, and this is, if we put O F = ξ:

Fig. 45.

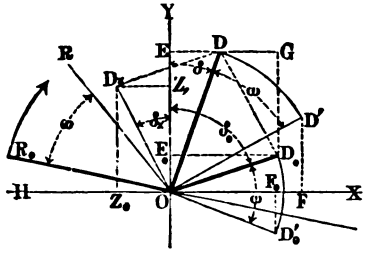

$$\xi = r \sin(\delta + \omega); \qquad (\alpha)$$

and the movement O $F_0 = \xi_0$ of the expansion-valve from its central position for the corresponding angular movement

$$\xi_0 = r_0 \sin(\delta_0 + \omega). \qquad (\beta)$$

But these two equations for the movements of the valve may be represented, as we also shall do on several future occasions, in a

Digitized by Google

graphical manner. At first, however, we shall examine more minutely the reciprocal positions and arrangement of the two valves.

The two valves are represented in Fig. 46 in their central position, and we shall suppose that they are not connected with the eccentrics, as they in that case could never occupy the position with regard to the valve-face on the cylinder shown in the figure. We shall next suppose the two plates of the expansion-valve to be drawn closely together, so that their inner edges touch each other. Let the length of one plate be $M E = M E_1 = l$, and the distance of the outer edges F and F_1 of the openings in the distribution-valve from the centre M be $M F_1 = M F = L$. The two valves in Fig. 47*a* are also drawn in their central position, but the two plates of the expansion-valve have in this case been each moved from the centre as much as the distance x, the two edges E and E_1 are therefore distant from the outer edges F and F_1 of the openings in the distribution-valve as much as $F E = F_1 E_1 = L - l - x = y$.

Fig. 46.

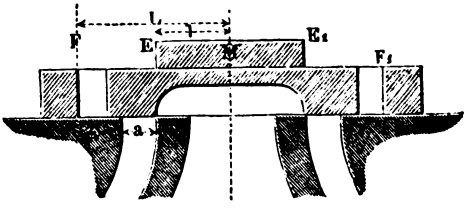

Fig. 47 *a* and *b*.

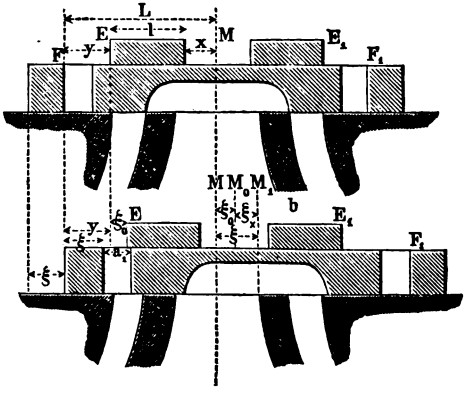

The two valves shall now be moved from the centre to their actual positions corresponding to any angular movement ω of the crank. The movement of the distribution-valve from its central position was according to Fig. 45 for the angular movement $R_0 O R = \omega$

$$\xi = r \sin(\omega + \delta),$$

and that of the expansion-valve

$$\xi_0 = r_0 \sin(\omega + \delta_0).$$

Digitized by Google

If we suppose, therefore, the two valves to be connected with their eccentrics, then they will occupy for the angular movement ω the position represented in Fig. 47*b*. The distribution-valve has in this case moved from its central position as much as $M M_1 = \xi$, and the expansion-valve as much as $M M_0 = \xi_0$.

If we call, according to Fig. 47*b*, the opening of the steam-port in the distribution-valve at that moment on the left-hand side a_1, then the following relation will at once easily be understood:

$$a_1 + \xi = y + \xi_0 \text{ or}$$
$$a_1 = y - (\xi - \xi_0).$$

But we have, as will be seen from Fig. 47*a*,

$$y = L - l - x$$

whence follows:

$$a_1 = L - l - x - (\xi - \xi_0). \qquad (\gamma)$$

But the value of x, and thus also the value $L - l - x$ is always known, and it is constant in any existing valve-motion for a fixed position of the plates of the expansion-valve. The opening a_1 of the port in the distribution-valve may therefore be calculated, according to equation γ, for any angular movement ω; for the values ξ and ξ_0 may be obtained by equations α and β.

But this determination is obtained more easily and quickly by means of the diagram, which is drawn half-size in Fig. 48; in order to distinguish several results better, we have at once chosen for the different dimensions fixed values. The eccentricity of the eccentric for the distribution-valve is $r = 0{\cdot}050^m$ (1·96″), that of the eccentric for the expansion-valve $r_0 = 0{\cdot}040^m$ (1·37″), the angle of advance of the former $\delta = 15°$, that of the other eccentric $\delta_0 = 60°$. Next, the outside lap of the distribution-valve is $e = 0{\cdot}010^m$ (0·39″), and the inside lap $i = 0$. (See Fig. 46, p. 191.)

In order to determine in a graphical manner at first the movements of the two valves for any angular movement ω of the crank, it is necessary to proceed, according to rules formerly given, as follows:

Let O be the centre of the axle (Fig. 48), O X the direction of the valve-face, and O Y perpendicular to it. Make now $Y O D = \delta$

Digitized by Google

and $Y O D_0 = \delta_0$, next the distances $O D = r$ and $O D_0 = r_0$, and describe circles on O D and O D_0 as diameters. The circle on O D is the valve-circle of the distribution-valve, which explains in a known manner, in connection with the circles described from O ($O V = e$) with the outside and inside lap as radii, the distribution of the steam, as the distribution-valve alone would produce. We shall not explain this distribution of the steam in the present case any further, as we should only have to repeat that which has been already stated on former occasions; but shall remark only, that the distribution-valve begins to open the steam-port in the cylinder for the forward motion when the crank occupies the position O V_3 or O R, and that it closes the port at the positions O V_4 or O R_4 of the crank.

Fig. 48.

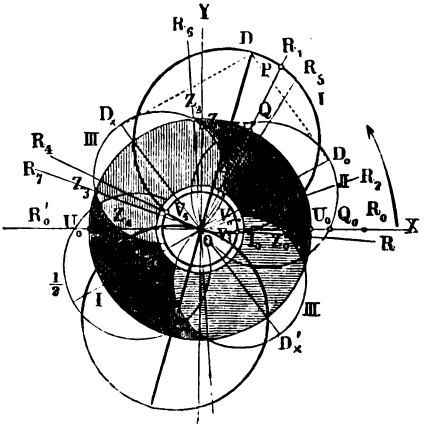

We have therefore in the present case only to examine the action of the expansion-valve. If we suppose the crank to have travelled from O X through the angle $X O R_1 = \omega$, then, as is known, the chord O P represents the movement ξ of the distribution-valve from the centre of its stroke; but in the same manner it follows that the chord O Q of the circle II. represents the movement ξ_0 of the expansion-valve for the same moment, and the value of $\xi - \xi_0$, which appears in equation γ, is thus already determined by the diagram. We have thus

$$\xi - \xi_0 = P Q,$$

i. e. the difference between the movements of the two valves is equal to that part P Q of the centre line O R_1 of the crank which falls between the two valve-circles I. and II. As now also $L - l - x = y$, as formerly supposed, the opening a_1 of the port in the distribution-valve is thus known for any angular movement ω, namely—

$$a_1 = y - P Q.$$

Digitized by Google

But it is more convenient for practical use to measure a_1 directly from the diagram, according to the following rule:—If we mark upon $O R_1$ from O the distance P Q, so that $O Z = P Q$, then we may prove that the different values of $O Z = \xi - \xi_0$, which belong to corresponding angular movements of the crank, are again chords of a circle (III.), which has a remarkable relation to the two valve-circles. If we put $O Z = \xi_x$, then, as Fig. 47*b* will prove, $\xi_x = \xi - \xi_0$ is *nothing else but the distance of the centre of the expansion-valve from the centre of the distribution-valve for the corresponding position of the crank.*

But from equation $\xi_x = \xi - \xi_0$, we have, according to the given values of ξ and ξ_0,

$$\xi_x = r \sin(\delta + \omega) - r_0 \sin(\delta_0 + \omega) \text{ or}$$
$$\xi_x = -(r_0 \sin \delta_0 - r \sin \delta) \cos \omega + (r \cos \delta - r_0 \cos \delta_0) \sin \omega.$$

This equation expresses for any angular movement *the relative movement of the expansion-valve with respect to the distribution-valve;* thus nothing is altered in the whole occurrence, *when we suppose the distribution-valve to be out of action and the expansion-valve to be moved according to the law of the equation above given.*

But this law is very simple. If we put

$$r_0 \sin \delta_0 - r \sin \delta = A$$
$$r \cos \delta - r_0 \cos \delta_0 = B, \text{ then follows:}$$
$$\xi_x = A \cos \omega + B \sin \omega.$$

But that is again, as proved formerly on several occasions, nothing else but the polar equation of two circles which touch each other, and the pole of which lies at the point of contact. These circles are to be laid down, as is well known, in the following manner:—

Make $O Z_0 = A$ (Fig. 48) (this value is to be marked from O towards the left-hand side, on account of the negative value of A) and $O Z_1 = B$, and draw through Z_0 O and Z_1 a circle. If we now produce the diameter $O D_x$ beyond O, make $O D'_x = O D_x$, and describe also a circle over $O D'_x$ as a diameter, then these two circles are the required ones, *and those parts of any centre lines of the crank which fall inside these circles, represent at once the distances of the centre of the expansion-valve from the centre line of the distri-*

Digitized by Google

bution-valve. The upper circle O D_x represents the positions from M_1 (Fig. 47*b*) towards the left; but if the centre line of the crank passes through the circle O D'_x, then the corresponding part represents the movement towards the right.

The two circles explain, therefore, all questions with reference to the relative positions of the expansion-valve and distribution-valve. But before we proceed to apply these results to practical cases, we shall give a more simple method for the construction of these auxiliary circles.

At first, with reference to the diameter O D_x of this circle, we have (Fig. 49)

$$O D_x = \sqrt{O Z_0^2 + O Z_1^2} = \sqrt{A^2 + B^2}$$

or, substituting the values of A and B, as above given:

$$O D_x = \sqrt{(r_0 \sin \delta_0 - r \sin \delta)^2 + (r \cos \delta - r_0 \cos \delta_0)^2}$$

or after sufficient evolution:

$$O D_x = \sqrt{r^2 + r_0^2 - 2 r r_0 \cos (\delta_0 - \delta)}.$$

The required diameter is thus next obtained in the following manner:—According to Figs. 49 and 48

$$O D = r, O D_0 = r_0 \text{ and}$$
$$\text{angle } D_0 O D = \delta_0 - \delta,$$

the connecting line D D_0 *of the end points of the centre lines of the two eccentricities is therefore, without anything further, the required diameter* O D_x = O D'_x = r_x *of the auxiliary circles* III. *in Fig.* 48. But the position of this diameter is determined in a manner equally easy. If we call the angle D_x O Y, which the diameter O D_x forms with the vertical axis δ_x, which angle in this case, as in previous investigations, may be called the angle of following, then we have:

$$tg \delta_x = \frac{D_x Z_1}{O Z_1} = \frac{A}{B} = \frac{r_0 \sin \delta_0 - r \sin \delta}{r \cos \delta - r_0 \cos \delta_0}.$$

If we draw through D and D_0, in Fig. 49, the horizontal lines E G and D_0 E_0, and through D_0 the vertical line D_0 G, then is D G = D_0 E_0 − D E = r_0 *sin* δ_0 − r *sin* δ and D_0 G = O E − O E_0 =

Digitized by Google

$r \cos \delta - r_0 \cos \delta_0$, or because $tg\, D\, D_0\, G = \frac{D\,G}{D_0\,G}$, it follows that the angle $D\, D_0\, G$ is equal to angle $D_x\, O\, Z_1 = \delta_x$.

There thus follows this simple rule for determining the position and the diameter $O\, D_x$ of the *third* valve-circle: Draw the crank $O\, R$ on the dead point and mark the eccentricities $O\, D = r$ and $O\, D_0 = r_0$ of the distribution-valve and of the expansion-valve according to the respective angles of advance; then if we consider the eccentricity $O\, D$ as the diagonal and $O\, D_0$ as the side of a parallelogram, we have next to construct to this parallelogram the second side $O\, D_x$, which is at once *the required diameter in respect to size and position.* Whilst thus a circle on $O\, D$ gives for any position of the crank the movements of the distribution-valve from its central position, and a circle on $O\, D_0$ the corresponding movements of the expansion-valve, *the relative movements of the expansion-valve with respect to the distribution-valve* are obtained by the circle on $O\, D_x$. The coincidence with the general laws of the relative motion is in this case of great interest.

Fig. 49.

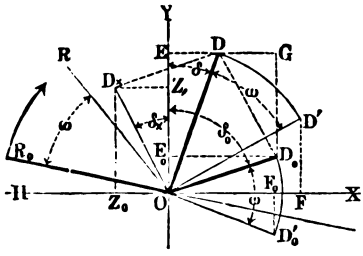

We shall return again to Fig. 48, p. 193, and suppose the crank to be turned from the position $O\, X$ on the dead point through the angle $R_1\, O\, X = \omega$; then we have according to the above:

$O\, P = \xi$ the movement of the distribution-valve } towards the
$O\, Q = \xi_0$ that of the expansion-valve } right.
$O\, Z = \xi_x$ the movement of the latter with respect to the former (towards the left).

As the figure is drawn half-size, the different dimensions may be obtained directly by measurement.

These preparations being made, it is easy to determine the size of the opening a_1 of the port in the distribution-valve.

We had

$$a_1 = L - l - x - (\xi - \xi_0).$$

Digitized by Google

Describe a circle with $O U = O U_0 = L - l - x$ as radius. As we have found for the supposed angular movement $O Z = \xi_x = \xi - \xi_0$, we get now at once

$$U Z = O U - O Z = L - l - x - (\xi - \xi_0) = a_1,$$

i. e. U Z is the required opening a_1 of the port, or, moreover, the distance at that moment which the edge E of the plate has travelled beyond the edge F of the port (Fig. 47*a*). *Of course, if this distance is larger than the width a_0 of the port, the latter is quite opened.*

We have

$$L = 0{\cdot}120^m\ (4{\cdot}72'');\ l = 0{\cdot}070^m\ (2{\cdot}75'');\ x = 0{\cdot}020^m\ (0{\cdot}78'')$$

the width of the port in the distribution-valve

$$a_0 = 0{\cdot}018^m\ (0{\cdot}708'').$$

and the other dimensions are as formerly supposed. The value of x indicates, as is known, that the plates of the expansion-valve have moved so much towards the outside; this value is the only one variable in Meyer's locomotive valve-motion; but we may take it for the present as constant, and put it $= 0{\cdot}02^m\ (0{\cdot}78'')$.

Fig. 48 explains now the whole distribution of the steam.

Let the crank be at first on the dead point, thus at the position O X; the distribution-valve is at this moment distant from its central position as much as $\xi = O P_0$ towards the right, and it has opened the steam-port as much as the lead $V_0 P_0 = 0{\cdot}003^m\ (0{\cdot}118'')$.

The opening of the port in the distribution-valve on the same side is obtained by the formula already given, namely:

$$a_1 = L - l - x - (\xi - \xi_0)$$

In this $L - l - x = 0{\cdot}03^m\ (1{\cdot}18'')$, and according to the above, because

$$\xi - \xi_0 = (r_0 \sin \delta_0 - r \sin \delta) \cos \omega + (r \cos \delta - r_0 \cos \delta_0) \sin \omega,$$

for $\omega = 0$

$$\xi - \xi_0 = -(r_0 \sin \delta_0 - r \sin \delta),$$

i. e. the value of $\xi - \xi_0$ is negative, whence follows

$$a_1 = L - l - x + r_0 \sin \delta_0 - r \sin \delta.$$

Digitized by Google

But according to the Figure, $L - l - x = O U_0$, and as $O Q_0 = r_0 \sin \delta_0$; $O P_0 = r \sin \delta$, and because $O Q_0 - O P_0 = O Z'_0 = O Z_0$:

$$a_1 = O U_0 + O Z_0 = U_0 Z_0.$$

The measurement gives for this value $0{\cdot}051^m$ (2″), whilst the width of the port is only $0{\cdot}018^m$ (0·708″). The port on the left-hand side of the distribution-valve is therefore quite opened at the beginning of the stroke. If we turn the crank as far as $O R_1$, then U Z was the opening a_1; and measurement gives in this case $a_1 = U Z = 0{\cdot}013^m$ (0·51″).

Fig. 48.

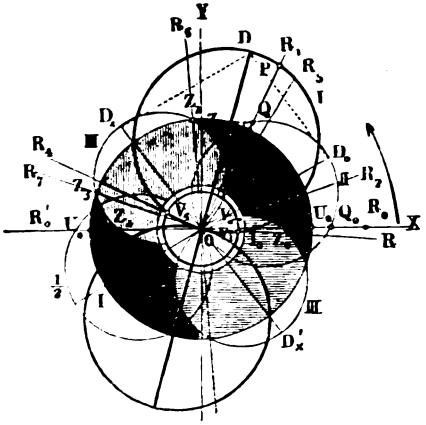

The value a_1 thus follows next for the forward motion of the piston, when we measure on the centre line of the crank from the circumference of the circle $U U_0$ *to the point of intersection with the upper valve-circle III.*; the point of intersection Z may be situated either on one or the other side of O.

The circles situated below O X explain the distribution of the steam for the backward motion of the piston; of course the occurrences are the same in the two cases, with this difference only, that we have to consider in the one case the ports on the left-hand side, and in the other the ports on the right-hand side.

We have also marked in Fig. 48 from U towards O the width of the port $U S = a_0 = 0{\cdot}018^m$ (0·708″), and have described a circle with O S as radius; we have thus obtained a complete understanding of the distribution of the steam, as we have marked that part of the figure which corresponds with the openings of the port in the left-hand side of the distribution-valve, with horizontal hatchings, and that part for the port on the right-hand side in the cylinder with vertical hatchings. (The narrow hatchings in the Figure have to represent vertical *as well as* horizontal hatchings.) Besides, the

Digitized by Google

whole distribution of the steam through the distribution-valve is represented by the Figure in the manner already known: the upper valve-circle I. represents the forward motion of the piston (from the right to the left); the lower one, the backward motion.

The following are the results obtained for any position of the crank: that part which falls into the space covered with horizontal hatchings gives the openings of the port in the left-hand side of the distribution-valve, that one falling into the space covered with vertical hatchings gives the openings of the port in the right-hand side. If the centre line of the crank cuts the upper valve-circle I., then the steam-port on the left-hand side in the cylinder is simultaneously *open*, whilst if it traverses the lower valve-circle I., the steam-port on the *right-hand side* is open.

If we now follow the crank from the dead point, the following results are at once obtained:—

Let it be supposed that the crank stands on the dead point, thus in the direction O X, then the steam-port on the left-hand side of the cylinder is opened by the distribution-valve as much as $V_0 P_0 = 0{\cdot}003^m$ (·118″) (lead); whilst the steam-port on the right-hand side is closed. The port in the left-hand side of the distribution-valve is quite open, but the port on the right-hand side is only opened as much as $U_0 Z'_0 = 0{\cdot}0075^m$ (0·29″). The steam enters the cylinder on the left-hand side.

Let the crank be now turned through the angle X O R_2 into the position of O R_2. This is the position at which the two ports in the distribution-valve are *quite* opened; the steam-port on the left-hand side in the cylinder is more opened than before, but the port on the right-hand side remains closed. The port in the left-hand side of the distribution-valve begins to be closed at the position O R_5, and it is quite closed when the crank arrives at the position O R_6, whilst the port in the right-hand side still remains quite open. The circumstance that this latter port remains in this case always open, whilst the steam enters into the cylinder on the left-hand side, is without influence, *as the distribution-valve meanwhile always keeps the steam-port on the right-hand side of the cylinder closed.* We have stated, that the port in the left-hand side of the distribution-valve begins to be closed

Digitized by Google

at the position O R_6 of the crank; *and thus expansion begins at that moment.* This position O R_6 is obtained if we determine the point of intersection Z_2 of the circle $U_0 U$ with the third valve-circle and connect Z_2 with O. It has been shown how to determine by this position of the crank the position of the piston and the grade of expansion.

If the crank is again turned to O R_7, at which position the centre line of the crank passes through the second point of intersection Z_3 of the circles above mentioned, then the port in the left-hand side of the distribution-valve re-opens. But as at the position O R_4 of the crank, the steam-port on the left-hand side of the cylinder is, as is known, already closed, this second opening in the present case is of no consequence. If, finally, the crank is turned to O R'_0 (the second dead point), the steam-port *on the right-hand* side of the cylinder has opened again as much as the lead; the port in the left-hand *side of the distribution-valve* is quite open, and that on the right-hand side is open as much as $U_0 Z_0$.

If the crank is turned through the second semicircle, the same rules are correct for the backward stroke of the piston; we have only to determine the corresponding points of intersection of the lower circles.

It will thus be seen with what correctness the diagram explains the whole distribution of the steam, and how very useful the action of the expansion-valve by Meyer is, for the ports in the distribution-valve are nearly always quite open, and the cutting-off of the steam may be effected quickly, and, if the different dimensions are correctly chosen, at any position of the piston. We shall now examine this latter property more minutely; but in order to avoid covering the diagram with too many lines, the corresponding circles have been drawn again full size in Fig. 21, Plate V. But we shall investigate in the present case only the distribution of the steam for the forward motion of the piston, and shall thus only examine the openings of the ports on the left-hand side (Fig. 47*b*), as the distribution of the steam is exactly the same for the backward stroke. We have marked in this case, also, from M_0 towards O_0, the radius O $M_0 = L - l$ and the value $M_0 u_0 = x$. The point Z_2, at which the circle described with $Ou_0 = L - l - x$ as radius cuts the valve-circle, has been connected with O and the

Digitized by Google

position O R_2 of the crank, at which the port in the distribution-valve begins to be closed, and at which, therefore, the expansion begins, is thus obtained. The circle described with O $M_0 - L - l = 0{\cdot}050^m$ ($1{\cdot}96''$) as radius may represent at the same time the crank-pin circle, so that the line L_0 L, therefore, represents the stroke of the piston. If we drop therefore from R_2 upon L_0 L, the perpendicular R_2 L_2 then L_0 L_2 is the distance travelled by the piston during the admission of the steam, and as L_0 L is equal to one decimetre ($3{\cdot}9''$), the length L_0 L_2 expressed in parts of a decimetre gives at once the duration of the admission; in the present case $= 0{\cdot}530$.

The valve-motion chosen in the present case has thus been completely examined, and we may now begin to investigate more minutely Meyer's valve-motion, in which the value x is variable, all other proportions in the diagram, however, remaining unaltered. $M_0 u_0$ was the value $x = 0{\cdot}020^m$ ($\cdot 78''$), *i. e.* the distance the plates of the expansion-valve were moved from the centre towards the outer sides. If we now move the plates still farther towards the outside, so that (Fig. 47*a*) the value x becomes $= 0{\cdot}0305^m$ ($1{\cdot}2''$), then the corresponding degree of expansion is obtained in the following manner:—Mark from M_0 (Fig. 21, Plate V.) towards O the value $x = 0{\cdot}0305^m$ ($1{\cdot}3''$), thus making $M_0 u_8 = x$; describe from O, with O u_8 as a radius, a circle, and mark the points of intersection Z_8 and Z_9 of this circle with the valve-circle. If we now draw O Z_8 and O Z_9 till they meet the crank-pin circle, then O R_8 represents the position of the crank at which the steam is cut off; *the expansion begins* here, and the duration of the admission $\frac{L_0 L_8}{L_0 L} = 0{\cdot}333$ or $\frac{1}{3}$. The corresponding port in the distribution-valve opens again at O R_9, but this opening has no influence, for the distribution-valve, as is known, closed the steam-port on the left-hand side of the cylinder when the crank arrived at O R_5. It will thus be seen, with what facility the degree of expansion for the corresponding position of the plates, and thus for any value of x, may be obtained. If the value of x is larger than O M_0, or larger than $L - l$, the method is still correct. If we, for example, move the plates towards the outside as much as

$$M_0 u_{10} = x = 0{\cdot}065^m \ (2{\cdot}6'')$$

Digitized by Google

then we have to describe the circle with O u_{10} as radius, to connect the point of intersection Z_{10} with O, and to draw the line from O as far as R_{10}. O R_{10} is therefore in this case the position of the crank, and L_{10} that of the piston at the beginning of the expansion, and $L_0 L_{10}$: $L_0 L = 0{\cdot}015$ the corresponding degree of expansion. If we finally move the plates towards the outside as much as $M_0 Z_4 = x = 0{\cdot}0715$, it will then be seen that the cutting-off of the steam takes place just at the beginning of the stroke. It thus follows that Meyer's valve-motion admits of any extent of admission being employed, and the expansion can thus be carried to its highest limit. Of course, an expansion so high is not used, or the position of the plates might be applied to shutting off the steam altogether, and thus to stopping the motion of the engine. But it is certainly a great advantage in Meyer's valve-motion that any grade of expansion may be used, a property which, as has been proved in a former chapter, decidedly does not belong to Gonzenbach's valve-motion. It now only remains to examine the limit of the expansion on the other side. If we suppose again the plates to be distant from the centre as much as $x = M_0 u_0 = 0{\cdot}020$, we find in this case that the beginning of the expansion takes place at the position O R_2 of the crank, and $L_0 L_2 : L_0 L = 0{\cdot}530$ is the degree of expansion, and next that at the position O R_3 of the crank, at which the centre line of the crank passes through the second point of intersection Z_3, the port in the distribution-valve is again already opened; we have stated that this is of no consequence in this case, as the distribution-valve closed the corresponding steam-port when the crank occupied the position O R_5, at which the centre line of the crank passes through V_4. But it will thus be seen, that it is absolutely necessary *that the port in the distribution-valve should not be opened before the distribution-valve has closed the corresponding steam-port.* If we move, for example, the plates so far back that $M_0 u_6 = x = 0{\cdot}0155^m$, and describe a circle with O u_6 as radius, this circle will cut the valve-circle at Z_6 and Z_7; O Z_6 is therefore now the position of the crank at the beginning of the expansion; but the port is again opened at O Z_7, and thus before the corresponding steam-port in the cylinder is closed, for the crank arrives sooner at O R_7 than at O R_5. We obtain therefore also in

Digitized by Google

this case the peculiar result, just as in Gonzenbach's valve-motion, that the steam enters the cylinder twice during the forward motion of the piston. If we determine the corresponding positions of the piston, we find that the steam enters the cylinder whilst the piston travels from L_0 to L_6, from L_6 to L_7 it acts by expansion, and at that position fresh steam enters the cylinder until the piston has arrived at L_5. Although the disadvantageous influence of such a distribution of the steam is in the present case generally not so great as we showed formerly in the case of Gonzenbach's valve-motion, it is, nevertheless, allowed that it should not take place.

Those valve-motions, which have been examined by the author by the aid of diagrams and models—the dimensions being taken from different drawings of locomotives—all show the peculiarity that at a certain position of the plates the steam enters the cylinder twice during the stroke. But the diagram will show how easily this disadvantage of Meyer's valve-motion may be remedied, at least for the forward motion of the locomotive. The proportions of the dimensions of the diagram, Fig. 21, Plate V., have been intentionally chosen, so that this disadvantage might be observed. At first we have to determine the lowest degree of expansion; this, without doubt, takes place when the port in the distribution-valves is opened at the same moment *at which the distribution-valve closes the steam-port in the cylinder*. The latter takes place when the crank arrives at O R_5; the centre line of the crank cuts the valve-circle at that position at Z_5; if we describe, therefore, from O a circle with O Z_5 as radius, we obtain at O Z_4 the position of the crank, and at L_4 that of the piston for the lowest limit of expansion, the corresponding duration of admission being $L_0L_4 : L_0L = 0{\cdot}595$, and the plates being distant from the centre as much as $R_4 Z_4 = M_0 u_4 = 0{\cdot}0175^m$ ($0{\cdot}68''$). If we move the plates farther back, we shall find a double admission of the steam, and if we move the plates back as much as $R_x D_x = M_0 u_x = 0{\cdot}0140^m$ ($\cdot 55''$), the steam will be cut off only momentarily, and that when the crank arrives at the position O R_x. If we move the plates still farther back, about so much that $x = R_x Z_x = M_0 u = 0{\cdot}010$, the steam will be allowed to enter the cylinder without interruption, and the plates will produce only a temporary narrowing of the ports in the distribution-

Digitized by Google

valve. The smallest opening is at the position of the crank O R_x; as, for example, in this case $Z_x D_x = 0{\cdot}0035^m$ (0·137″). This narrowing does not influence the distribution of the steam, as it only takes place in the second half of the stroke; it is, however, disadvantageous to construct the valve-motion so that the plates can be drawn back so far as has been supposed. If we make, for example, $x = 0$, *i. e.* if we place the plates as shown in Fig. 46, p. 191, the diagram, Fig. 21, Plate V., will then give a continued admission of the steam, and the smallest opening of the port will be $R_x D_x = 0{\cdot}0140^m$, thus nearly the whole width of the port. As, however, a great opening is not at all necessary at the position O R_x of the crank; it follows, that we have taken the value of $L - l$ as too great; or if we suppose that the length l of the plates is chosen in an advantageous manner, that the length L of the distribution-valve is too large (Fig. 46, p. 191). It will thus be seen from the following, that it is quite sufficient to make the length $L - l$, thus O M_0 (Fig. 21, Plate V.) exactly equal to the diameter O D_x of the auxiliary circle.

In order now to determine, by means of the diagram, the rules which have to be observed in the construction of a new valve-motion, we start with the view that it will be most advantageous if the expansion-valve allows *all* grades of expansion, or, as is sufficient, if we can reduce the expansion so far that finally the expansion and distribution valve cut off the steam *simultaneously*. If such an arrangement could be obtained, then there would be nothing left to be desired in Meyer's valve-gear. But it is really possible to fulfil these conditions for the forward motion. A close examination of the diagram, Fig. 21, Plate V., shows that the cutting-off of the steam takes place—other circumstances being equal—the later, the more the diameter O D_x of the valve-circle falls towards O R_5, and the valve-motion will act best when both centre lines coincide. This condition is easily fulfilled by a corresponding choice of the eccentricities and angles of advance, *only the eccentricities of the eccentrics of the expansion and distribution valve must not be taken*, as is generally the case in practice, *as equal, and the angle of advance of the eccentric of the expansion-valve as* 90°. The proportions which occur in this case are best determined by the solution of the following

Digitized by Google

general problem, which at the same time shows how easily all questions relating to this valve-motion may be answered without any calculation, and without any experiments on models. This problem, however, shall at first relate to a stationary engine, which only runs into one direction.

Problem. A stationary steam-engine, with Meyer's variable expansion gear, is to be arranged in such a manner, that all grades of expansion which the distribution-valve allows may be obtained. The length of the plates of the expansion-valve is to be determined, and at the same time the distances are to be ascertained which the plates have to be distant from the centre for the periods of admission

$$\tfrac{1}{6},\ \tfrac{1}{4},\ \tfrac{1}{3},\ \tfrac{1}{2},\ \tfrac{2}{3},\ \tfrac{3}{4},\ \text{and}\ \tfrac{5}{6}.$$

Let the eccentricity of the eccentric of the distribution-valve be $0{\cdot}040^{m}$ ($1{\cdot}57''$); the angle of advance be $\delta = 15°$; the outside lap of the distribution-valve be $e = 0{\cdot}008^{m}$ ($0{\cdot}31''$); the width of the steam-port in the cylinder be $a = 0{\cdot}025^{m}$ ($0{\cdot}98''$); and that of the port in the distribution-valve be $a_0 = 0{\cdot}020^{m}$ ($0{\cdot}78''$).

Solution. In this case the eccentricity and the angle of advance of the eccentric of the expansion-valve are to be first determined.

Make $Y\,O\,D = \delta = 15°$ (Fig. 50), next $O\,D = 0{\cdot}040^{m}$ ($1{\cdot}57''$), and describe on O D the valve-circle. Describe next from O circles with the outside lap $O\,V = e = 0{\cdot}008^{m}$ ($0{\cdot}31''$), and also with $O\,R_0 = 0{\cdot}050^{m}$ ($1{\cdot}96''$) as radii; the latter circle represents the crank-pin circle. (The figure is drawn half size.)

Fig. 50.

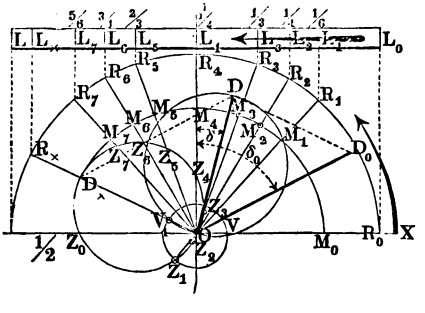

If we connect the point of intersection V_4 of the lap and valve circles with O, we obtain at $O\,R_x$ the position of the crank, at which the distribution-valve cuts off the steam.

The diameter of the auxiliary circle, marked III. in Fig. 48, shall now coincide with the centre line $O\,R_x$ of the crank; if we make $O\,D_x = 0{\cdot}035^{m}$ ($0{\cdot}137''$), and complete from $O\,D_x$ and O D the parallelogram, then follows

Digitized by Google

$O D_0 = 0 \cdot 048^m$ (1·8″) as the *eccentricity of the eccentric of the expansion-valve and* $Y O D_0 = 59°$ *as its angle of advance.*

We have, therefore, in the present instance, not—as it is generally the case—to take the eccentricities as *equal.* Describe now on $O D_x$ a circle, and chose $L = l$ (Fig. 46). This value has to be as small as possible. The lowest limit is, as already stated, $L - l = O D_x = 0 \cdot 035^m$ (0·137″), and we shall keep this value.

It is next a question, how far the plates are to be moved towards the outside in each different case, in order to obtain the required degree of expansion. Mark upon $L_0 L$ (stroke of the piston) the positions of the piston L_1, L_2, L_3 &c., which correspond with the required points of cut-off, and determine for each the corresponding position $O R_1$, $O R_2$ &c., of the crank, as well as the points of intersection Z_1, Z_2, Z_3, Z_4 &c. The points of intersection of the centre lines of the crank at these positions with the circle III. give at once the values of x for each degree of expansion. If we describe from O a circle with $O D_x = L - l$ as a radius, then, according to what has been stated previously, the value of x when the steam is cut off at $\frac{1}{6}$ is:

$$M_1 Z_1 = 0 \cdot 0435^m \text{ (1·71″)}$$

and the two plates are, therefore, to be moved outwards to this extent, when the engine has to work with the steam cut off at $\frac{1}{6}$th of the stroke. The value of x is obtained in the same manner for the other grades:

Steam cut off at	$\frac{1}{4}$	stroke	$x = M_2 Z_2 = 0 \cdot 0370^m$ (1·45″)
,,	$\frac{1}{3}$	,,	$x = M_3 Z_3 = 0 \cdot 0310^m$ (1·22″)
,,	$\frac{1}{2}$	,,	$x = M_4 Z_4 = 0 \cdot 0195^m$ (0·76″)
,,	$\frac{2}{3}$	,,	$x = M_5 Z_5 = 0 \cdot 0100^m$ (0·39″)
,,	$\frac{3}{4}$	,,	$x = M_6 Z_6 = 0 \cdot 0060^m$ (0·23″)
,,	$\frac{5}{6}$	,,	$x = M_7 Z_7 = 0 \cdot 0030^m$ (0·118″)

The cut-off of the steam when $x = 0$ takes place at the position $O R_x$ of the crank or the position L_x of the piston, and is effected by the plates and by the distribution-valve simultaneously; it is, however, only cut off momentarily. But the immediate opening of the port in the distribution-valve has no influence upon the distribution of the steam. If the cut-off of the steam has to take place just at the

Digitized by Google

beginning of the stroke, then x must be $= M_0 Z_0 = 0{\cdot}0665^m$ (2·72″). If we suppose a cut-off at $\frac{1}{6}$ to be the earliest, then the edge E (Fig. 47*a*, p. 191) is distant from the outer edge F as much as

$$F E = y = L - l - x = 0{\cdot}035 - 0{\cdot}0435 = -0{\cdot}0084^m \ (0{\cdot}33'')$$

it being supposed that the two valves occupy relatively their central positions. The negative sign shows that E lies to the left of F. The centre of the upper valve is most distant from that of the lower one, when the distance between these centres is $O D_x$ (Fig. 50). But the inner edge of the plate must not open the port at that moment, and the length of the plate must be, therefore, at least

$$l = O D_x + a_0 - F E \text{ or}$$
$$l = 0{\cdot}0635^m \ (2{\cdot}5''),$$

and we may take it therefore as $0{\cdot}065^m$ (2·55″).

But $L - l = 0{\cdot}035^m$ (1·37″), therefore the value

$$L = 0{\cdot}100^m \ (3{\cdot}9'').$$

We have thus all questions answered, and, as the examination of Fig. 50 shows, in a very simple and comprehensive manner.

Besides, the above results coincide with those obtained from experiments which the author has made with a model; so that the diagram makes any calculation, or the construction of models, quite unnecessary.

The proportions are a little different when the valve-motion has to be applied to locomotives or to such engines as have to run forwards and backwards. In such cases the investigation is best made in the manner above explained for the forward motion; but it is, however, necessary to make the angle of advance δ_0 of the forward eccentric larger than is the case, for example, in Fig. 50; so that the angle δ_x, at which the diameter $O D_x$ follows the centre line of the eccentric, becomes a *little smaller*.

If we, for example, should accept for the forward motion the same proportions as in the above example, the distribution of steam in this case would be very good, but very disadvantageous for the backward motion. $O D_1$, Fig. 51, is the eccentricity of the backward eccentric; and if we consider now this as a diagonal and the

Digitized by Google

obtained eccentricity O D_0 of the eccentric of the expansion-valve as the one side of a parallelogram, then the second side O D_y is the diameter of that auxiliary circle, which explains the action of the expansion-valve during the backward motion in the same manner as the circle described over O D_x did for the forward motion. Let us now suppose the crank to be turned in the direction of the arrow. It is now easy to understand that O D_y is rather too large, if O D_0 is determined in the manner above described. If we make the eccentricity O D = O D_1 = r of the distribution-valve as small as possible, as it is made by Meyer, we may improve the distribution of the steam for the backward motion; the same will be the case, if we determine the *values of* L *and* l *with reference to* O D_y, *and not, as it was done in the above instance, with reference to* O D_x, *i.e.* we have to make $L - l = O D_y$. There is thus nothing altered in the manner of investigating the distribution of the steam for the forward motion, but the distribution-valve has generally to be longer. Meyer takes $\delta_0 = 90^0$ and obtains thus an equal distribution of the steam for the forward and backward motion, it being supposed that the angles of advance for the forward and backward eccentrics are equal. But this arrangement, as the diagram, Fig. 21, Plate V., proves, shows some disadvantages, especially that the lower limit of the expansion is reduced; and it is better to make δ_0 smaller than 90°. Besides, it is always *disadvantageous* in engines which have to run forwards and backwards, to make the eccentricity of the eccentric of the expansion-valve equal to that of the eccentric of the distribution-valve. A better distribution of the steam is always produced when the former is taken a little larger than the latter. If we start with the view, which is certainly a correct one, that the distribution of the steam has to be as advantageous as possible during the forward motion, even at the expense of a less efficient distribution during the backward motion, then Meyer's valve-motion is the

Fig. 51.

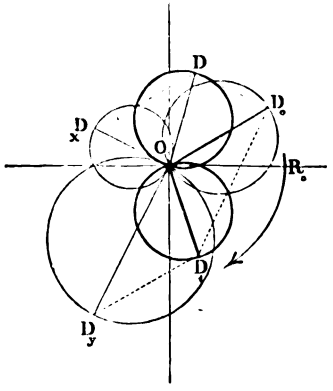

Digitized by Google

best of all valve-motions with variable expansion. A cut-off between O and $\frac{3}{4}$ of the stroke may also be produced for the backward motion at Meyer's valve-motion, if the different dimensions are chosen in a correct manner, whilst a perfect expansion-gear may be produced for the forward motion, if the rules given in the above example are applied.

The limits between which expansion in the present case may be applied to backward motion, are much wider than was the case in Gonzenbach's valve-gear for the *forward motion*.

To stationary engines no better valve-motion can be applied, as our investigations have shown, than that by Meyer, it being supposed that the distribution of the steam has to be produced by two valves. It seems that the great advantages of this valve-motion in this respect have not received at the present time the acknowledgment they deserve.

CHAPTER III.

Valve-motion by Polonceau.

Description of the Valve-motion.

This double valve-motion was first executed by Polonceau, and was also applied by Krauss to several locomotives of the North-Eastern Railway of Switzerland with complete success. Krauss also gave first a description of this valve-motion in the 'Civilingenieur,' vol. vi. p. 110, and there used our diagram for the closer examination of its action.

Fig. 22, Plate V. shows a general arrangement of this new valve-motion. The link CC_1, the convex side of which is turned toward the axle, and which is suspended in the middle by a link, swinging round a fixed centre, receives an oscillating motion from the two eccentrics D and D_1 fastened upon the axle O. The arrangement of these parts is therefore the same as used by Gooch and as has been examined in Chapter II. of the first part. Polonceau, however, applies a *double* link—a link with *two* guides. The sliding-block M of the radius-rod MN is moved in the one guide; this radius rod is connected at N with the valve-spindle of the distribution-valve S, so that the latter receives its motion from the point M of the oscillating link.

Digitized by Google

The second sliding-block M_1 of the radiusr-od M_1N_1 is moved in the other guide of the same link; this radius-rod M_1N_1 transfers the motion of the point M_1 of the link to the expansion-valve S_1.

The movement of the sliding-blocks M and M_1 by means of the lowering or raising of the radius-rods MN and M_1N_1 is effected by the driver by means of the reversing levers AB and A_1B_1, the ends B and B_1 of which are connected by rods with the bell-crank levers WW and W_1W_1; whilst the rods K and K_1 transfer the movement to the radius-rods.

The reversing levers move in the arc H H, which is provided with notches, and in which these levers can be fixed at different positions, in the usual manner, by means of springs. The distribution-valve S has the same shape as that in Meyer's valve-motion. The expansion-valve S_1, however, consists of a simple plate, but moves also on the top of the distribution-valve.

Fig. 22, Plate V., represents the reversing lever A B of the distribution-valve at the extreme position, and thus in fore-gear, whilst the reversing lever $A_1 B_1$ of the expansion-valve occupies its central position. The extreme upper point of the link governs in these positions the distribution-valve S, and the dead point of the link the expansion-valve. The following investigations will show that in this case, when the lever A B occupies the extreme position, and when the lever $A_1 B_1$ stands at the first grades for forward or back gear, the highest grade of expansion, or a very early cutting off of the steam, may be attained. But the investigations will also show that in this valve-motion, as in Gonzenbach's, a certain limit of expansion exists. If a smaller degree of expansion, or a later cutting off of the steam is required, then this valve-motion also, as a double valve-motion, fails. This is, however, no disadvantage; for the expansion-valve may in this instance be put out of action by simply placing the two reversing levers A B and $A_1 B_1$ in the same notch for forward or back gear. The two valves move then exactly in the same manner, and we may say the valve S_1 forms with the distribution-valve S a single valve only, and the loss of power which is always connected with the application of a separate expansion-valve thus disappears in this case entirely.

The action of Polonceau's valve-motion is exactly the same as that

Digitized by Google

of a link-motion on Gooch's system with *one* valve, if we move the two reversing levers parallel to each other. The valve-motion is used very often in this manner, both for forward and backward running of the locomotives for short distances, at stations and at starting; but Polonceau's valve-motion in this case has, on account of the arrangement of the reversing levers, the inconvenience that the driver has to use both hands for moving the levers. Krauss has lately adapted to his engines the ingenious arrangement represented in Fig. 23, Plate V., which will entirely avoid this inconvenience. In this H H is again the fixed arc, provided with notches, in which, however, in this case only, the reversing lever A B of the distribution-valve is kept by means of a detent in its different positions. A second arc, $H_1 H_1$, also provided with notches, is now *fastened* to the lever A B at P, so that the arc is moved together with the lever. The reversing lever $A_1 B_1$ of the expansion-valve can be fixed in the notches of *this arc*, $H_1 H_1$. The use of the levers can now easily be understood. When the reversing levers occupy the position represented in Fig. 23, Plate V., the two valves are in action almost in the same manner as in the arrangement of the different parts shown in Fig. 22, Plate V. If the driver intends to place the expansion-valve out of action, and to use, therefore, the valve-motion as a simple link-motion on Gooch's system, he has only to place the detent of the lever $A_1 B_1$, in the notch *b* of the second arc $H_1 H_1$. The other lever is then moved simultaneously with the lever A B.

Theory and Application of the Diagram.

In investigating the action of Polonceau's valve-motion, we may refer to many facts which were stated during the investigation of the valve-motions by Gooch and Meyer.

Let (Fig. 52) the eccentricity of the eccentrics again be $= r$, the two equal angles of advance each $= \delta$; the lengths of the eccentric rods C D and $C_1 D_1 = l$; and the half-length of the link $C J = C_1 J = c$. Next, let the distance from the dead point J of the link to the slide-block M of the radius rod, which transfers the motion to the distribution-valve, thus the length J M, be $= u$, and if we imagine

Digitized by Google

that the crank occupies the position O R_0 when it passes through the dead point, then the travel X B = ξ of the distribution-valve or its

Fig. 52.

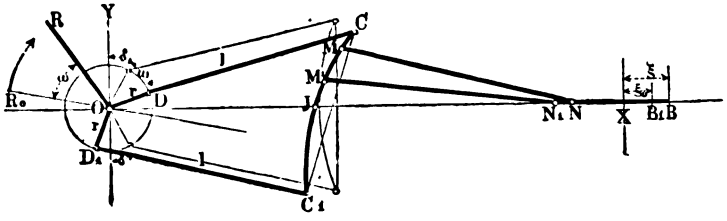

movement from its central position X when the crank has travelled through the angular movement R O $R_0 = \omega$ is given by the formula:

$$\xi = r\left(\sin\delta \pm \frac{c}{l}\cos\delta\right)\cos\omega \pm \frac{u\,r}{c}\left(\cos\delta \mp \frac{c}{l}\sin\delta\right)\sin\omega.$$

(See equation III., p. 103.)

The upper sign in this formula is correct for open rods, the lower one for crossed rods. We shall not examine here the manner in which the distribution of the steam is effected, if the dimensions of the distribution-valve are given, and if the expansion-valve in the present valve-motion is put out of action; for we should only have to repeat what has been already stated upon pages 109–113, regarding the application of the diagram to Gooch's valve-motion. It only remains, therefore, for us to investigate the action of the expansion-valve.

The expansion-valve of the present valve-motion receives its motion from the same link as the distribution-valve; but the position of the slide-block M_1 in the link is different. If we suppose the distance of this block from the dead-point J of the link, thus the length J M_1, to be u_0, then the movement ξ_0 of the expansion-valve from its central position is again obtained by the formula above given; for it is, if we substitute u_0 for u:

$$\xi_0 = r\left(\sin\delta \pm \frac{c}{l}\cos\delta\right)\cos\omega \pm \frac{u_0\,r}{c}\left(\cos\delta \mp \frac{c}{l}\sin\delta\right)\sin\omega.$$

By the two formulæ above given, we may therefore determine for any position of the crank, and for any position of the two slide-blocks, the positions of the two valves. But the most important question in the present case is that with respect to the grade of expansion

Digitized by Google

which corresponds with the supposed positions of the slide-blocks. We may suppose at first the two valves to occupy their central positions (Fig. 53*a*); and if we next denote the whole length E E_1 of the plate of the expansion-valve by 2 L, and the distance of the outer edges E and E_1 from the outer edges F and F_1 of the ports in the distribution-valve by *s*, we have then in this case only to answer the question, how far the port in the distribution-valve is opened when the two valves have moved from their central positions as much as ξ and ξ_0 respectively. Fig. 53*b* represents the two valves as having moved in this manner, and it will thus be seen at once that between the opening a_1 of the port in the distribution-valve, the width of which may be called a_0, and the other dimensions exists the relation

Fig. 53.

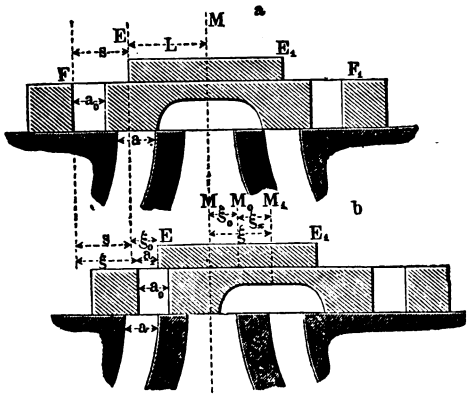

$$a_1 + \xi = s + \xi_0,$$

whence follows:

$$a_1 = s - (\xi - \xi_0).$$

The quantities on the right-hand side are known for an existing valve-motion according to the formulæ formerly given, and there thus exists no difficulty in ascertaining, by means of calculation, the law for the distribution of the steam effected by Polonceau's valve-motion. The investigation, however, becomes more simple if we in this case also apply the diagram.

If we put in the formula given for a_1 the difference $\xi - \xi_0 = \xi_x$, we get

$$a_1 = s - \xi_x; \qquad (\alpha)$$

and if we use the formula given for the movements of the valve:

$$\xi_x = \frac{(u - u_0)\, r}{c} \left(cos\, \delta \mp \frac{c}{l}\, sin\, \delta \right) sin\, \omega. \qquad (\beta)$$

Digitized by Google

But the value ξ_x represents simply the movement of the expansion-valve with reference to the distribution-valve, and gives thus the law of the relative motion of the former; but the equation ( ) is again the polar equation of two circles, the diameters of which in this case, as will be shown later, are perpendicular to the direction of the valve-face, and the radii of which represent again in a known manner the values of ξ_x. In order to explain the diagram still further, we shall now take a certain example and shall choose at once the dimensions of a valve-motion which has been constructed by Polonceau himself.

The eccentricity of the two eccentrics is $r = 0{\cdot}066^m$ (2·59″), the angles of advance $\delta = 30°$; the length of the eccentric rods is $C D = C_1 D_1 = l = 1{\cdot}500^m$ (59″) (Fig 52, p. 212), the half-length of the link is $C J = C_1 J = c = 0{\cdot}120^m$ (4·79″). The valve-motion has open rods, and the outside lap of the distribution-valve is $e = 0{\cdot}030^m$ (1·18″); the inside lap is $i = 0$; the width of the steam-ports in the cylinder is $a = 0{\cdot}035^m$ (1·37″); and the width of the ports in the distribution-valve is $a_0 = 0{\cdot}030^m$ (1·18″); finally, the value marked s in Fig. 53a is $= 0{\cdot}036^m$ (1·42″). We shall next suppose the link to have four grades of expansion for the forward motion and as many for the backward motion; whilst the radius rod is to be raised or lowered so far that the slide-block at the last grade coincides with the centre lines of the eccentric rods, in which case, therefore, we have to put $u = +c$ or $-c$.

We shall suppose at first the slide-block of the radius rod for the distribution-valve to be raised to its highest position, and thus to be on the fourth grade fore-gear; then, according to our supposition, $u = c$; if we also put in the equation given for ξ

$$A = r\left(\sin\delta + \frac{c}{l}\cos\delta\right)$$

$$B = \frac{u\,r}{c}\left(\cos\delta - \frac{c}{l}\sin\delta\right),$$

then we get, by substituting the values above given, $A = 0{\cdot}0367^m$ (1·47″), and $B = 0{\cdot}0544^m$ (2·14″).

In order now to explain by the diagram the movement of the valve, we mark on the axle O X (Fig. 54) the length $O B = \frac{1}{2} A =$

Digitized by Google

$0{\cdot}0188^m$ ($\cdot 732''$) as abscissa, and $B\,C_4 = \frac{1}{2}\,B = 0{\cdot}0272^m$ ($1{\cdot}07''$) as ordinate, and obtain thus at the point C_4 the centre of the valve-circle IV., which has to be described from C_4 with $C_4\,O$ as radius; the rays now of this circle represent the movement of the valve, if we suppose that the valve receives its motion from the fourth grade of the link. In the present case it is the distribution-valve that is thus driven. If we describe now from O a circle with the outside lap $O\,V = e = 0{\cdot}030^m$ ($\cdot 118''$) as radius (Fig. 54 is drawn half size), we obtain, as is known, in the position $O\,V_3$ or $O\,R_3$ the position of the crank at which the admission of the steam begins and at which the crank stands as much as the angle $R_3\,O\,R_0$ before the dead point; when the crank has arrived at $O\,V_4$ or $O\,R_4$ the distribution-valve would cut off the steam if the expansion did not exist. In order now to determine the beginning and the end of the exhaustion of the steam, it is necessary to describe another circle from O with the inside lap i as radius; in the present case $i = 0$, and therefore the line, which is drawn from O perpendicular to the diameter $O\,D_4$ of the circle IV., represents the position of the crank for the end of the exhaustion of the steam (beginning of the compression) on the other side of the piston; but at the same moment there begins also the release of the steam on the front side. If it is desired to examine in a similar manner the distribution of the steam for the other grades; we have only simply to divide, according to what has been stated during the investigation of Gooch's valve-motion, the ordinate $B\,C_4$ into as many parts (in this case into four) as there are grades of expansion, and to describe the valve-circles from the points of division C_1, C_2, &c.

Fig. 54.

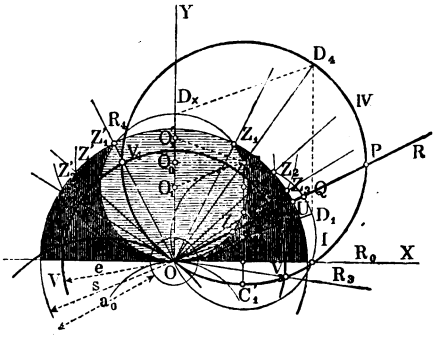

We shall now suppose in the present case, as an example, the slide-block of the radius-rod of the expansion-valve to be on the *first* grade fore-gear; the circle I., described from C_1 with $C_1\,O$ as radius, then

Digitized by Google

gives at once in the present case the law of the movement of the expansion-valve, whilst circle IV. gives that of the distribution-valve, if, as we shall always suppose for the future, the radius rod of the latter is so far raised or lowered that the slide-block coincides with the centre lines of the eccentric rods. If we now suppose the crank to have moved from the dead point O R_0 through the angle $R_0 O R = \omega$, then the length O P represents, as is known, the movement ξ of the distribution-valve, and the length O Q the movement ξ_0 of the expansion-valve from the central position; next, the difference between the two distances, thus Q P, represents the value ξ_x, *i. e.* the movement of the latter valve with reference to the former, exactly in the same manner as was the case in Meyer's valve-motion. But in this instance, also, a better understanding may be obtained if we mark the length Q P from O upon the radius vector, thus making $O Z = \xi_x$; the points Z determined in this manner lie again in a circle, the position of which it is easy to ascertain. The distribution-valve is moved in this case exactly in the same manner as if it received its motion from an eccentric, of which the eccentricity = O D_4 and the angle of advance = Y O D_4; the movement of the expansion-valve on the first grade will in this case also take place in the same manner as if it was produced by an eccentric with the eccentricity O D_1 and the angle of advance Y O D_1. If we now desire to ascertain the movement of the expansion-valve with reference to the distribution-valve, we have only to proceed in the same manner as was described during the investigation of Meyer's valve-gear; construct with the eccentricities O D_1 and O D_4 a parallelogram, the diagonal of which is O D_4, the one side being O D_1, and the other side O D_x is then in this case, as in the former one, with respect to size and direction, the diameter of the auxiliary valve-circle, the rays of which represent at once the relative movement of the upper valve upon the lower one. The distance O Z of the centre line O R is therefore at once the required value ξ_x.

But the matter is still more simple in the present valve-motion than in Meyer's, for the diamater O D_x of the relative valve-circle is in the present case always situated, as will easily be seen, on the line O Y, which is perpendicular to the direction O X of the valve-

Digitized by Google

face. The centre O_1 of this circle is, however, obtained in a quicker manner, if we draw through C_4 a line parallel to $O C_1$ and if we determine the point of intersection O_1 of this parallel line with the vertical line O Y, it being supposed that the lower valve is governed by the fourth, and the upper one by the first grade of the link; we may then describe from O_1 a circle with $O O_1$ as radius.

In order now to complete the diagram, it is required to describe from O circles with the lengths $s = 0{\cdot}036^m$ ($\cdot 142''$), and $s - a_0 = 0{\cdot}006^m$ ($\cdot 023''$) as radii.

The opening of the port in the distribution-valve for different positions of the crank is now found at once by means of the diagram. In Fig. 54, $O U = s$, and as for any position O R of the crank the distance O Z represents the value ξ_x, the length $Z U = s - \xi_x$, and, therefore, according to equation (α) at once the opening a_1 of the port in the distribution-valve at this position of the crank.

If we now further examine in the diagram, the variations of the distance Z U upon the centre line of the crank, when the turning of the latter takes place, it will be observed that the value a_1 becomes *nil* at the position O Z_1 of the crank, at which position, therefore, the *expansion begins*, whilst the opening begins again when the crank arrives at O Z'_1.

If we now place the slide-block of the radius rod of the expansion-valve on the dead point of the link, in order to procure a variation of the expansion, then O_0 becomes the centre of the auxiliary valve-circle, whilst if the slide-block is placed in the first grade back-gear, then O'_1 is the required centre; in the former case O Z_2, in the second one, O Z_3 represents the position of the crank at the beginning of the expansion, and O Z'_2 or O Z'_3 represents in the same manner the position of the crank at the opening of the port in the distribution-valve.

It will thus be seen that Polonceau's valve-motion produces the higher expansion, *i.e.* cuts off the steam the sooner, the more the slide-block of the radius rod of the expansion-valve is lowered in the link; we may, therefore, under any circumstances, cut off the steam with the present valve-motion as early as it is ever required in practice.

But, on the other hand, there exists a certain limit, beyond which the valve-motion ceases to act as a double valve-motion. The points

Digitized by Google

of intersection Z'_1 Z'_2 Z'_3 are all situated behind the position O R_4 of the crank; the reopening of the port in the distribution-valve by the expansion-valve takes place therefore, as is also necessary, only when the distribution-valve has already closed the corresponding port in the cylinder; if that should not be the case, the steam would also in this valve-motion, as we have already pointed out in the case of the valve-motions by Gonzenbach and Meyer, enter the cylinder twice; or finally, if we proceed still farther, the relative valve-circle would not cut the circle described with O U = s as radius; in the latter case, the expansion-valve narrows the ports in the distribution-valve alternately, and moves backwards and forwards on the top of this valve uselessly. As, therefore, the point of intersection Z'_1 need but coincide with R_4, the other limit of expansion is thus given. If we draw through O and R_4 a circle, the centre of which lies in O Y, the relative valve-circle for the extreme limit is obtained, and we may now easily conclude how far the slide-block of the radius rod of the expansion-valve may be raised at the most. Z'_1 almost coincides in the diagram with R'_4 for the first grade, whence follows that in this valve-motion, which was designed by Polonceau himself, the slide-block of the expansion-valve has never to be raised higher than the first grade fore-gear. If, therefore, a greater power of the engine is required, or a lower expansion, the steam being thus cut off later than at the position O Z_1 of the crank, is it necessary to place the expansion-valve out of action, and to use the valve-motion as a simple link-motion on Gooch's system; the cutting off the steam being then produced only through the distribution-valve, as we have already stated in describing the valve-motion on page 210.

Finally, we may refer to a peculiarity of Meyer's and Gonzenbach's valve-motions with reference to the loss of power which is produced by the movement of the expansion-valve on the top of the distribution-valve. It follows from the relative valve-circle O D_x, that the whole distance which the expansion-valve travels on the top, the lower valve at one revolution of the crank is = 4 O D_x; now, the power which is required to overcome the friction increases directly with the distance, and we may therefore say that in the two valve-motions above mentioned, *the loss of power produced by the motion of the expansion-*

Digitized by Google

valve is directly proportionate to the diameter O D_x *of the relative valve-circle.* This diameter is invariable in Meyer's valve-motion, and therefore, in that case, if we suppose an equal pressure of the steam in the steam-chest, the loss of power is the same for all grades of expansion. It is, however, different in Polonceau's valve-motion ; the diameter of the relative valve-circle becomes in this case the larger, the earlier the steam is cut off by means of the expansion-valve ; and in this instance, therefore, *the loss of power produced by the motion of the expansion-valve is the larger, the higher the expansion.* The same result is obtained for Gonzenbach's valve-motion. Polonceau's valve-motion, however, differs from the latter one, so far to its advantage, that the expansion-valve may be used in this case in the same manner for the forward motion as for the backward motion. Gonzenbach's valve-motion cannot, according to former investigations, be used in back-gear as a double valve-motion for locomotives.

Gonzenbach's valve-gear shows, finally, another peculiarity common to all such double valve-motions provided with two steam-chests, and in which, therefore, the expansion-valve does not move directly on the back of the distribution-valve, but on the fixed partition between the two steam-chests, and which is provided with corresponding openings. If, namely, the expansion-valve cuts off the steam in this case at a high expansion, as always is applied with such valve-gears, the steam accumulated in the lower steam-chest takes part in the expansion of the steam in the cylinder, until the distribution-valve also cuts off the steam, from which moment the expansion takes place in the cylinder only, and continues until the exhaustion begins. The expansion-curve consists, therefore, in engines with such valve-motions of two different parts, and the space of the lower steam-chest acts partly as a prejudicial space. This occurrence disappears with double valves, of which the one moves directly on the back of the other. The occurrence above stated, as well also as the question respecting the amount of the loss of power which is produced in the different systems of valve-motions by the friction of the valves, offers material for very interesting theoretical investigations, upon which, however, we cannot enter in this place, as they do not belong to the object of this treatise.

Digitized by Google

WORKS ON LINK-MOTIONS.

PHILLIPS, ingénieur des mines. Théorie de la Coulisse (de Stephenson) servant à produire la détente variable dans les machines à vapeur, et particulièrement dans les machines locomotives. Annales des mines, Tome III. 1854.

Deutsch im Civilingenieur. Bd. I, S. 164. 1854. 'Theorie der variabeln Expansion mittelst STEPHENSON'S Coulisse.'

This treatise by Phillips is the first* one which was published on link-motions; it explains, but only in an analytical manner, the valve-motion by Stephenson for equal and unequal angles of advance, as well as for open and crossed rods.

WEISBACH, Bergarth, Professor, Dr., Ingenieur- und Maschinen-Mechanik, Bd. III, S. 650.

Examines also the valve-motion by Stephenson only in an analytical manner, and that only for equal angles of advance and open rods. But Weisbach gives the general formula for the movement of the valve, different from the formula as given by Phillips, and for the first time in that manner in which it has been determined also in the present treatise. (Zeuner).

ZECH, E., Ingenieur. Zeitschrift des österreichischen Ingenieur-Vereines. 1855. 7. Jahrgang.

Zech finds in his treatise, which was published almost simultaneously with that by Weisbach, the same formula for the movement of the valve in Stephenson's valve-motion, but gives also for the first time the entire theory of the valve-motion by Gooch. Besides, Zech states at the end of his very elegant mathematical investigation, that the two equations which he obtains for the movements of the valves in both valve-motions, are the polar equations of circles, but he does not give any further attention to this fact.

* D. Kinnear Clark's 'Railway Machinery,' published in 1850, contained geometrical investigations of the action of the varieties of link-motions used in locomotives.—*Translator.*

Digitized by Google

REDTENBACHER, Hofrath, Professor. Gesetze des Locomotivbaues (Mannheim, 1855), S. 100: 'Die STEPHENSON'sche Taschensteuerung.'

Redtenbacher examines only the valve-motion by Stephenson, but neglects in the approximate calculations several quantities to such an extent, that, notwithstanding a simpler formula for the movement of the valve is obtained, the most remarkable peculiarity of Stephenson's valve-motion (variation of the lead) cannot be recognized in it. Stephenson's valve-motion, according to Redtenbacher, ought to have a constant lead for all degrees of expansion.

After the treatises given above, the following ones by the author of the present book were published; all important valve-motions were examined, and the circle diagram applied for the first time.

Ueber die Coulissensteuerungen. Civilingenieur, Bd. II, S. 202. 1856.

Examines the valve-motions by Stephenson and Gooch for open and crossed rods.

Ueber die Dampfvertheilung bei den neuern Locomotivensteuerungen. Civilingenieur, Bd. III, S. 10. 1857.

Examines the valve-motions by Stephenson and Hawthorn; by Heusinger von Waldegg, Gonzenbach, and Meyer.

Ueber die Diagrammsteuerung. Civilingenieur, Bd. III, S. 155. 1857.

Describes a simple model for use at lectures, by means of which the law of the motion of the valve of *all* link-motions may be shown in a clear manner.

Ueber die Locomotivsteuerung mittelst der STEPHENSON'schen Coulisse. Schweizerische polytechn. Zeitschrift, Bd. I. 1856.

REULEAUX, Professor. Die ALLAN'sche Coulissensteuerung. Civilingenieur, Bd. III, S. 92. 1857.

In this, as well as in all following treatises, the diagram is applied. Reuleaux gives here for the first time the entire theory of the very ingenious valve-motion by Allan with a straight link.

Digitized by Google

LEHMANN, Ingenieur F. Die BORSIG'sche Locomotivsteuerung. Organ für die Fortschritte des Eisenbahnwesens, Bd. XIII, S. 241. 1858.

The treatise gives the description, theory and the diagram of the double valve-motion, which is applied to most of Borsig's locomotives.

JENNY, Bergrath, Professor. Ueber die wichtigsten Constructionsverhältnisse und einige neue Anordnungen bei doppelt wirkenden stationären Hochdruckdampfmaschinen mit Schiebersteuerungen. Berg- und Hüttenmännisches Jahrbuch der K. K. Schemnitzer Bergacapemie, Bd. VIII. Wien 1859.

This excellent treatise gives the entire theory of the simple valve-motion, as well as that by Stephenson and Gooch; but besides also, for the first time, the theory and diagram of the link-motion by Pius Fink without, however, considering the missing quantity.

It is to be regretted that this treatise, written with great knowledge and elegance in the mathematical demonstration, has not been published in a separate form, so as to make it better known to engineers.

VOLKMAR, Ingenieur, W. Eine neue Expansionssteuerung für Locomotiven. Civilingenieur, Bd. V, S. 179. 1859.

The treatise gives the entire theory of the double valve-motion invented by Volkmar, and which has been applied to engines of the North-Eastern Railway of Switzerland. The whole mechanism is very ingenious.

FUHST, Ingenieur, H. 'Untersuchungen über die MEYER'sche variable Expansion' und 'Die MEYER'sche variable Expansion als Locomotivsteuerung.' DINGLER'S polytechn. Journal, Bd. 151, Heft 2 bis 5. 1859.

The first treatise contains a few special investigations of Meyer's valve-motion by means of the diagram; the author proposes in the other treatise to apply, instead of Stephenson's link, a link which swings round a fixed centre, and is moved by *one* eccentric.

Digitized by Google

KRAUSS, Maschinenmeister. Ueber Locomotivensteuerungen im Allgemeinen und insbesondere die Steuerung von POLONCEAU. Civilingenieur, Bd. VI, S. 110. 1860.

The author gives here, for the first time, a description of Polonceau's valve-motion, and examines its action by means of the diagram. Besides, the treatise compares the different valve-motions applied to locomotives, with respect to the distribution of the steam.

VON. GRIMBURG, R., Ritter. Bemerkungen über die FINK'sche Steuerung. Zeitschrift des österr. Ingenieur-Vereins. 1862.

Contains the theory of the valve motion (without considering the missing quantity), and proves by an example the coincidence of the results of the diagram, with those obtained by experiments on a model.

SCHMIDT, Gustav, Professor. 'Die Coulissensteuerungen.' Zeitschrift des österr. Ingenieur-Vereins. 1866.

The treatise contains the investigation of the chief formulæ, and of the diagrams of the valve-motions by Stephenson, Gooch, Allan, Heusinger von Waldegg, and Fink. Schmidt determines here, for the first time, for Fink's valve-motion also the missing quantity (a little different from the results of the present third edition of Zeuner's treatise on valve-motions), and the treatise gives for the other valve-motions a different way of determining the chief formulæ, but besides these no results which are not to be found in the former editions of this present book.

MÜLLER, Ober-Ingenieur, O. H. Ueber Umsteuerungen, besonders für Schiffsmaschinen. Zeitschrif des Vereins deutscher Ingenieure. Bd. X. 1866.

This article examines with great knowledge the reversing motions as applied to marine engines, and finally points out the advantages which are obtained in this case by the application of Fink's valve-motion.

MAW, W. H., and SLADE, FRED. J. 'Locomotive Engineering and the Mechanism of Railways.' By ZERAH COLBURN. 1867.

This work contains several chapters, by W. H. Maw and F. J. Slade, devoted to the geometrical investigation of the various link-motions in

Digitized by Google

general use on locomotive-engines, including Stephenson's, Gooch's, Allan's, and Heusinger von Waldegg's. The methods of adapting the valve-gears to the various circumstances met with in practical construction are also considered.

VOLKMAR, Ingenieur, W. Ueber Verbesserungen an den Expansionssteuerungen mit einem Schieber. Organ für die Fortschritte des Eisenbahnwesens. 1868.

An interesting article, which examines more minutely the distribution of the steam of the valve-motions with one valve, and which shows the advantages of the application of Trick's port-valve.

NAPIER AND MACQUORN RANKINE. On the use of movable seats for slide-valves. (The Engineer. October, 1867. S. also Deutsche Industrie-Zeitung. Jahrg. 1868).

The ingenious arrangement which is here proposed for link-motions, and which is explained by means of the polar diagram, is nothing else, strictly taken, but a new double valve-motion. The outer edges of the two ports for the admission of the steam form the inner edges of a valve shaped like a frame; this valve is moved by a special eccentric, and on its top the distribution-valve, which is of the common shape, moves backwards and forwards. A correct arrangement attains that the compression increases less quickly with the increasing of the expansion, than is the case in other link motions.

LONDON: PRINTED BY W. CLOWES AND SONS, STAMFORD STREET AND CHARING CROSS.

Digitized by Google

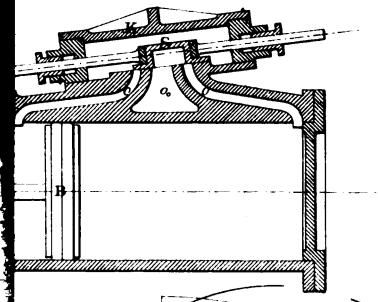

Fig. 3.

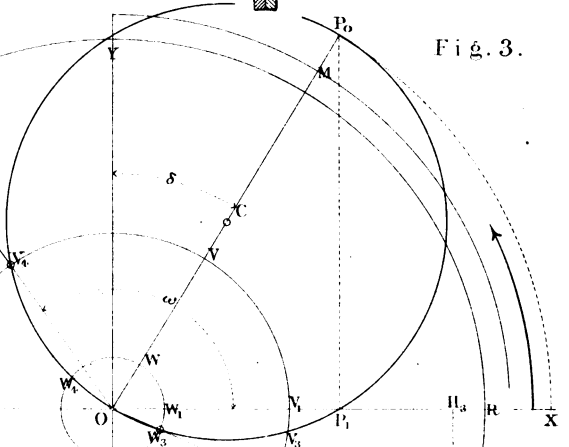

Fig. 4.

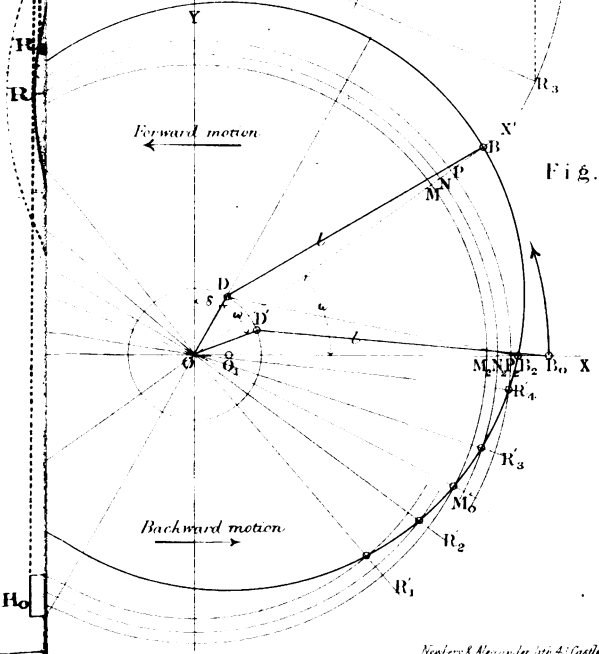

Newbery & Alexander lith. 4, Castle St. Holborn

Digitized by Google

THE NEW YORK
PUBLIC LIBRARY

ASTOR, LENOX AND
TILDEN FOUNDATIONS
R 1913 L

Digitized by Google

Fig. 9.

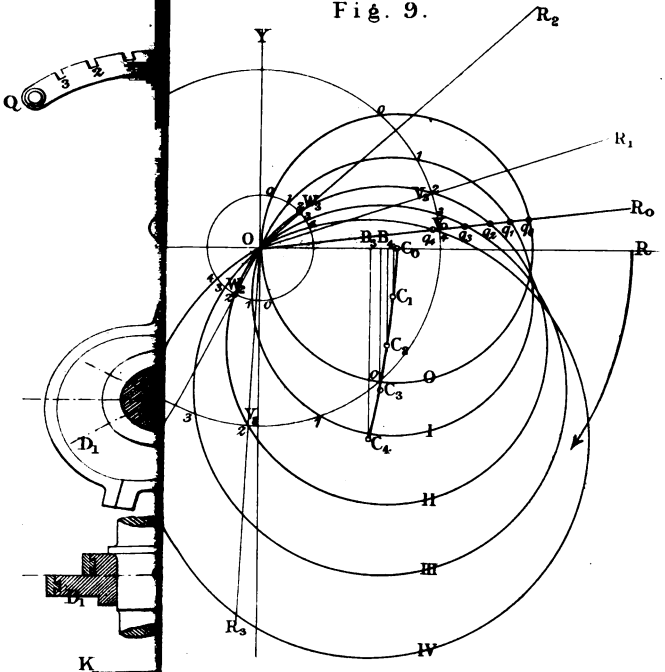

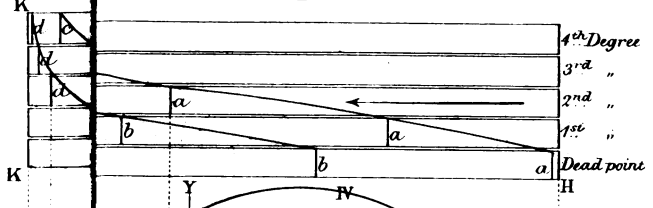

Fig. 10.

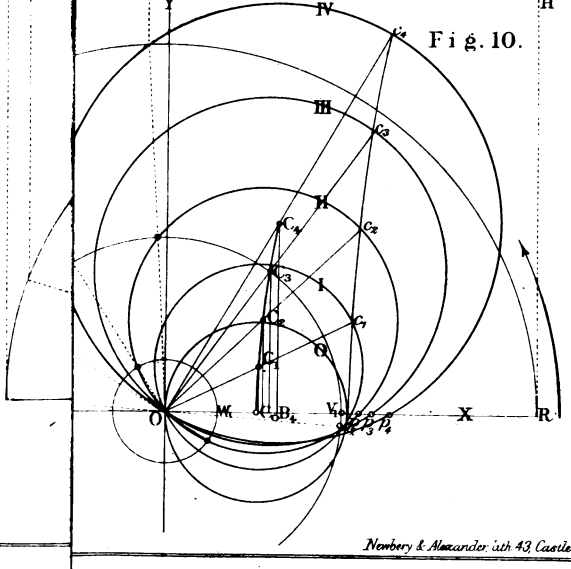

Newbery & Alexander, lith. 43 Castle St. Holborn.

Digitized by Google

THE NEW YORK
PUBLIC LIBRARY
ASTOR, LENOX AND
TILDEN FOUNDATIONS

Digitized by Google

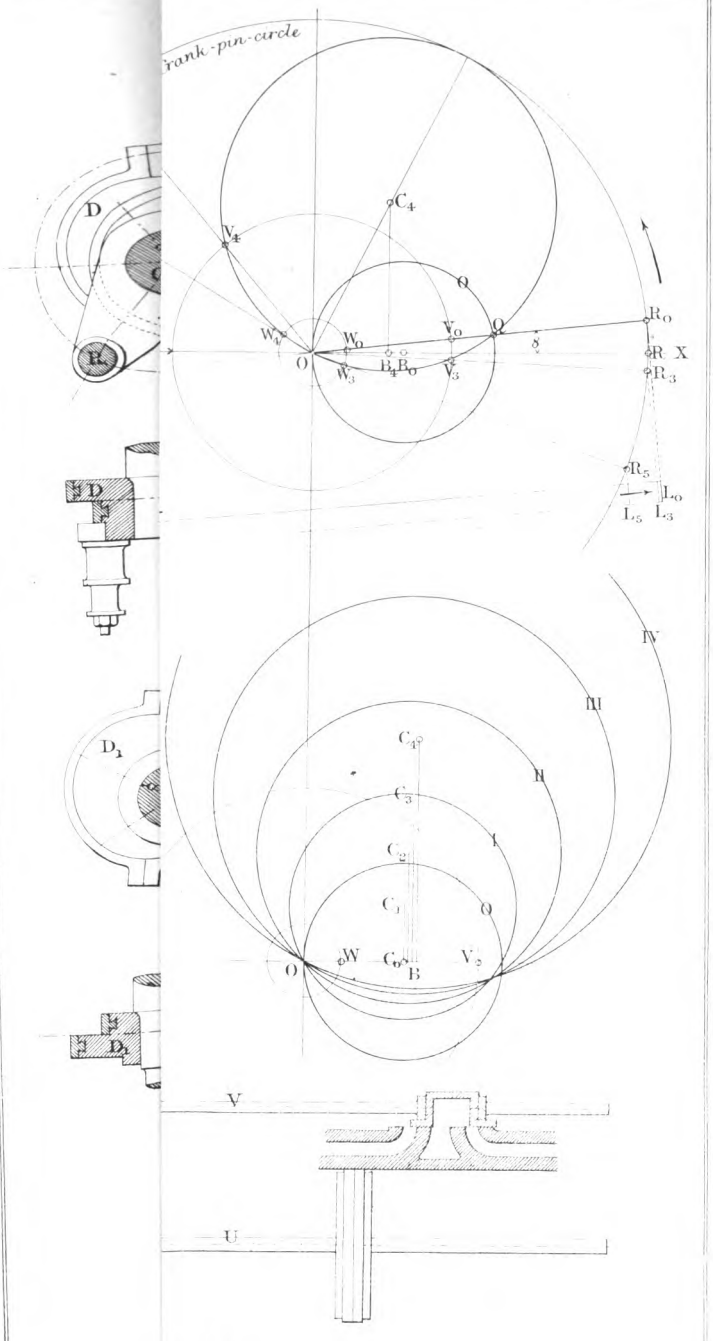

.DEGG.

Newbery & Bleaunder lith. 40, Castle St. Holbor

THE NEW YORK
PUBLIC LIBRARY

ASTOR, LENOX AND
TILDEN FOUNDATIONS
R 1919 L

Digitized by Google

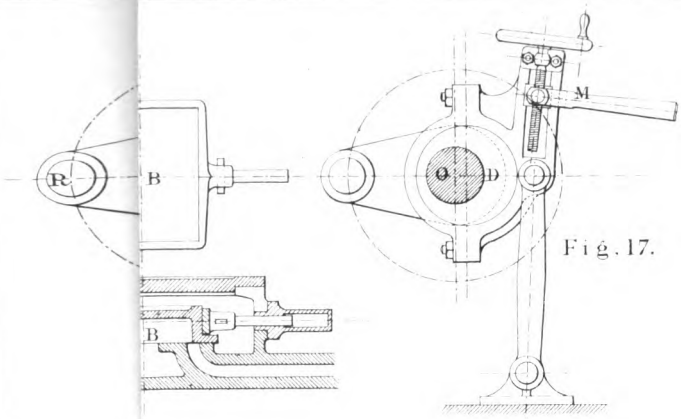

Fig. 17.

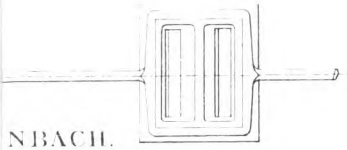

NBACH.

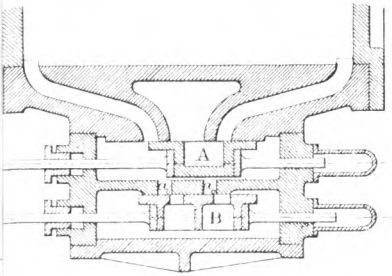

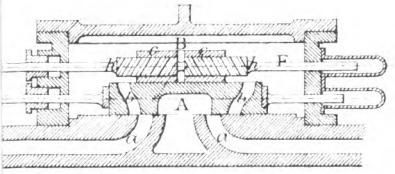

ER.

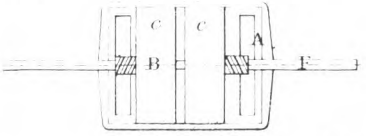

Newbery & Alexander lith. 43 Castle St. Holborn

Digitized by Google

THE NEW YORK
PUBLIC LIBRARY
ASTOR, LENOX AND
TILDEN FOUNDATIONS
R 1919 L

Digitized by Google

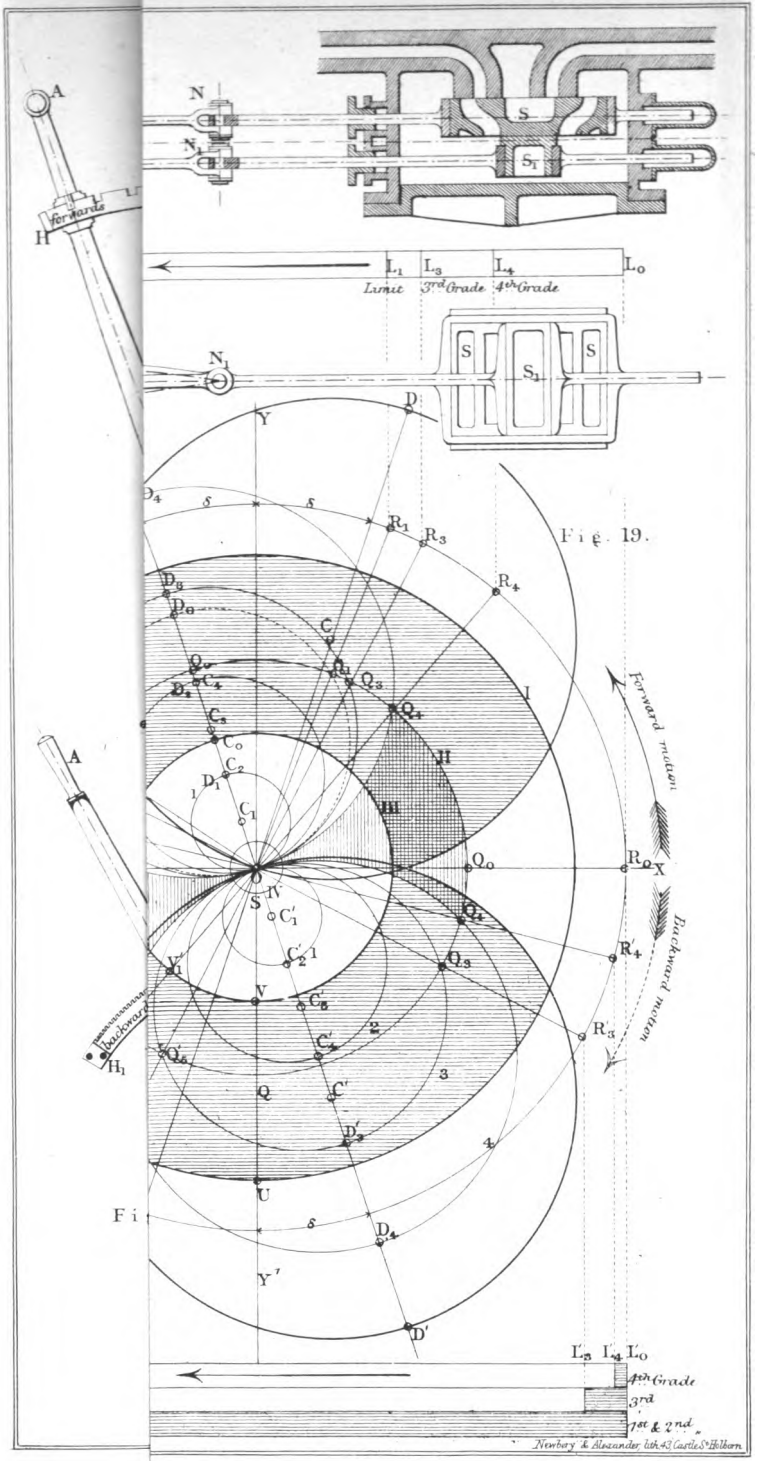

Digitized by Google

THE NEW YORK
PUBLIC LIBRARY
ASTOR, LENOX AND
TILDEN FOUNDATIONS
R 1919 L

Digitized by Google

Digitized by Google

Digitized by Google

Digitized by Google

THE NEW YORK PUBLIC LIBRARY
REFERENCE DEPARTMENT

This book is under no circumstances to be taken from the Building

form 410

Digitized by Google

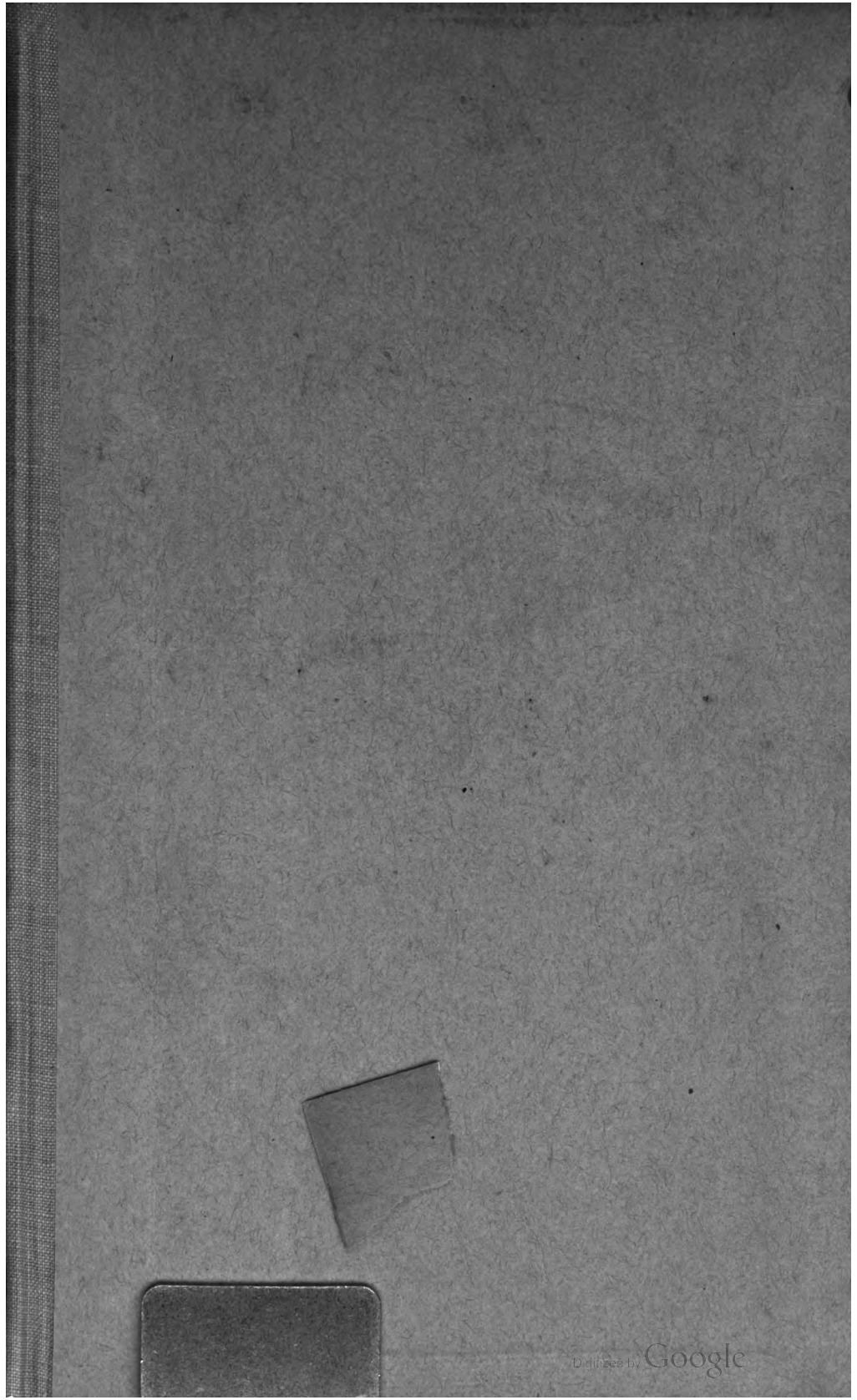
Digitized by Google

Digitized by Google